Evaluation Board for E-type Full SiC Module with 2nd Generation 1700V SiC-MOSFET

User's Guide

＜High Voltage Safety Precautions＞

Please read all safety precautions before using the board.

Please note that this document covers only the evaluation board for E-type Full SiC Module with 2nd Generation 1700V SiC-MOSFET (BSMGD2G17D24-EVK001) and its functions. For additional information, please refer to the datasheet.

To ensure safe operation, please carefully read all precautions before handling the evaluation board

Depending on the configuration of the board and voltages used,

Lethal voltages may be generated.

Therefore, please make sure to read and observe all safety precautions described in this document.

Before Use

[1] Verify that the parts and/or components are not damaged or missing (i.e. due to the drops).
[2] Check that there are no conductive foreign objects on the board.
[3] Be careful when performing soldering on the module and/or evaluation board and be sure there is not solder splash.
[4] Check that there is no condensation or water drops on the circuit board.

During Use

[5] Be careful to not allow conductive objects to come into contact with the board.
[6] **Brief accidental contact or even bringing your hand close to the board may result in discharge and lead to severe injury or death.**

Therefore, DO NOT touch or approach to the board with your bare hands.

In addition, as mentioned above please exercise extreme caution when using conductive tools such as tweezers and screwdrivers.

[7] Use the board beyond its rated voltages, may cause defects such as short-circuit or, depending on the circumstances, explosion or other permanent damages.
[8] Be sure to wear insulated gloves when handling is required during operation.

After Use

[9] The ROHM Evaluation Board contains circuits which store high voltage. Since it stores charges even after turning off the connected power circuits, please discharge the electricity after using it, and please deal with it after confirming such electric discharge.
[10] Protect it against electric shocks by wearing insulated gloves when handling.

This evaluation board is intended for use only in research and development facilities and should by handled **only by qualified personnel, familiar with all safety and operating procedures.**

We recommend carrying out operation in a safe environment that includes the use of high voltage signage at all entrances, safety interlocks, and protective glasses.

© 2020 ROHM Co., Ltd. All rights reserved.

＜Precautions for use＞

Please read all safety precautions before using the board

■About non-mounted components.
The following components are non-mounted:
・Gate Resistors(R118~R125,R218~R225)
・Soft Turn-off Resistors(R126,R226)
Please mount these components before using this evaluation board.
For more information, please refer to the User Guide.

■About operation check
Gate drive output will not work without assembling a SiC-module, because of the Short Circuit Protection feature (SCP).
Please assemble the SiC-module before checking the operation of the board.

■About Power ON sequence
Please make sure the gate signal is Low before turning on this evaluation board.
Secondary side UVLO (under voltage protection of gate drive positive bias voltage) will be activated if you turn on this evaluation while the gate signal is High.
In order to output the gate signal, you need to reset the latch by supplying the High signal to ENA pin.

■About purpose of use
The purposes of the evaluation board are technical development, demonstration and evaluation only. The evaluation board is not a final finished product suitable for use by general consumers. Therefore, please do not use the whole or a part of the evaluation board as a final finished product.

© 2020 ROHM Co., Ltd. All rights reserved.

Evaluation Board for Full SiC Module

Evaluation Board for E/G-type Full SiC Module with 2nd Generation 1700V SiC-MOSFET

BSMGD2G17D24-EVK001

1. Overview

This evaluation board, BSMGD2G17D24-EVK001, is a gate driver board for full SiC Modules with the 2nd Generation 1700V SiC-MOSFET in E type housing. This evaluation board contains all the necessary components for optimal and safety driving the SiC module.

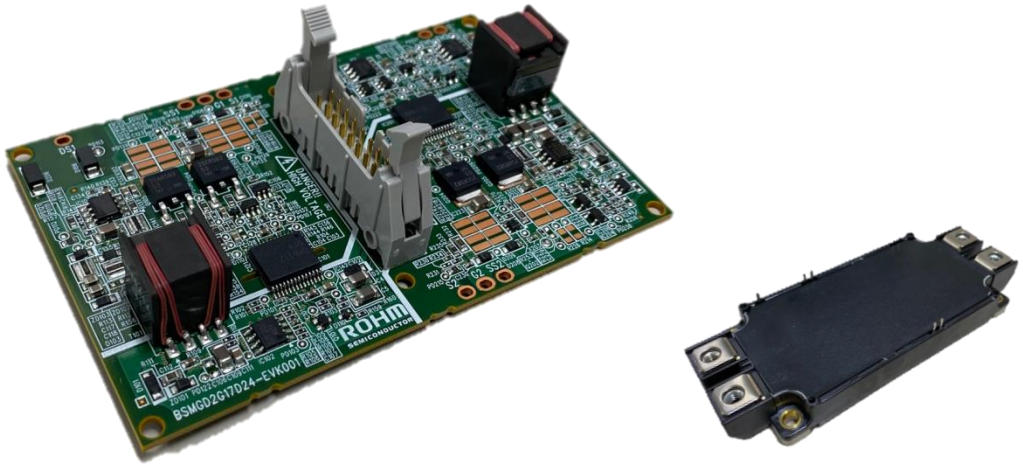

Figure 1. Evaluation board and SiC module

Table 1. Supported SiC module

Module type	V_{DSS} (V)	Module Part No.	MOSFET type		Topology	GD Board Part No.
E type	1,700	**BSM250D17P2E004**	2G	Planar	Half bridge	BSMGD2G17D24-EVK001

Note : Use this evaluation board only with the above indicated SiC module. Incorrect use may cause failures.

© 2020 ROHM Co., Ltd.

2. Feature

- Gate Drive
- Integrated isolated power supply
- Short Circuit Protection
- Under Voltage Protection (Power Supply Voltage)
- Under Voltage Protection (Gate Drive Positive bias Voltage)
- Over Voltage Protection (Gate Drive Positive bias Voltage)
- Over Voltage Protection (Gate Drive Negative bias Voltage)
- High-Side and Low-Side Simultaneous conduction prevention
- Control output ON/OFF
- Fault signal
- Temperature monitoring output

3. Pin

3.1 Pin assignment

Drive board pin assignment is shown in Figure 2, and MOSFET module pin assignment is shown in Figure 3.
Module pin is described in Table 2, and connector CN1 pin is described in Table3.

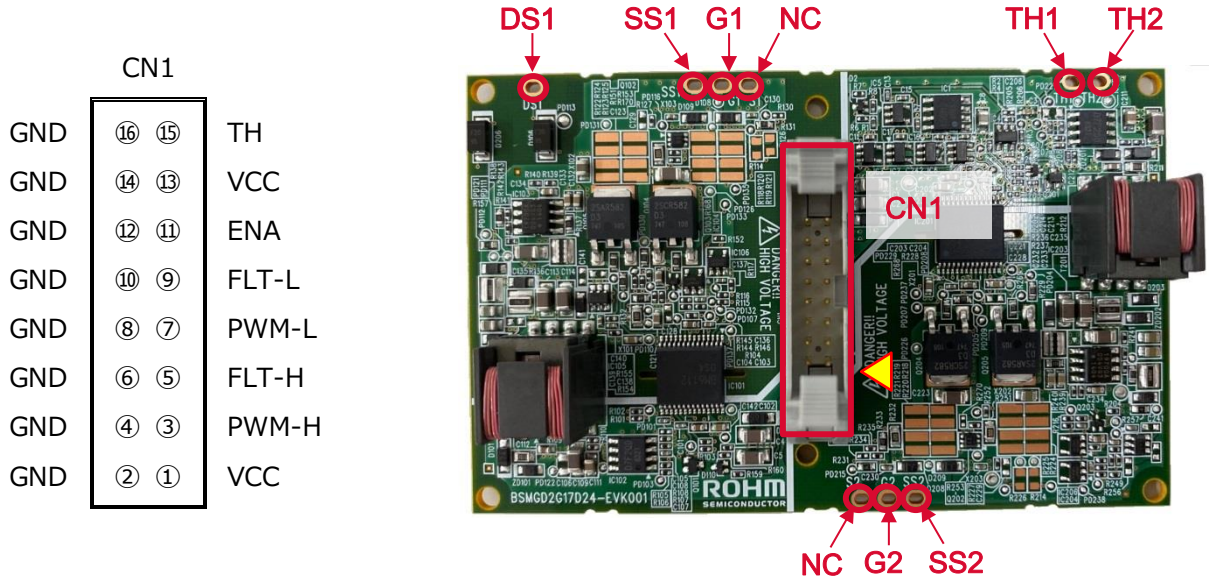

Figure 2. Pin assignment

Table 2. Module Pin Descriptions

Pin name	details
DS1	Drain sense (High side)
G1	Gate (High side)
SS1	Source sense(High side)
G2	Gate (Low side)
SS2	Source sense (Low side)
TH1	Thermistor
TH2	Thermistor

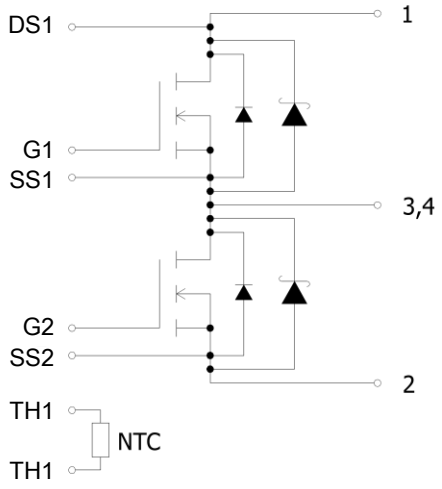

Figure 3. MOSFET Module Pin assignment

Table 3. CN1 Pin Descriptions

Connector	Pin	Signal name	I/O	details
CN1	1	VCC	I	Power Supply Voltage
	2	GND	--	Ground
	3	PWM-H	I	Input signal for High side SiC-MOSFET: • When PWM-H is "H" level, output (Gate Drive Voltage) is High. • When PWM-H is "L" level, output (Gate Drive Voltage) is Low.
	4	GND	--	Ground
	5	FLT-H	O	Fault signal pin (high side) The FLT pin is an open drain pin used to output a fault signal when: • Short circuit protection(SCP), Under voltage protection(UVP) , or • Over voltage protection (OVP) is active. Normal："L" When fault："Hi-Z"
	6	GND	--	Ground
	7	PWM-L	I	Input signal for Low side SiC-MOSFET. • When PWM-L is "H" level, output (Gate Drive Voltage) is High. • When PWM-L is "L" level, output (Gate Drive Voltage) is Low.
	8	GND	--	Ground
	9	FLT-L	O	Fault signal pin (low side) The FLT pin is an open drain pin used to output a fault signal when • Short circuit protection(SCP), Under voltage protection(UVP) , or • Over voltage protection (OVP) is active. Normal："L" When Fault："Hi-Z"
	10	GND	--	Ground
	11	$\overline{\text{ENA}}$	I	Enabling signal pin • When ENA is "L" level, output is enabled. • When ENA is "H" level or open, output is disabled.
	12	GND	--	Ground
	13	VCC	I	Power Supply Voltage
	14	GND	--	Ground
	15	TH	O	Temperature monitoring output pin
	16	GND	--	Ground

© 2020 ROHM Co., Ltd.

3.2 I/O Equivalence Circuits

■PWM-H,PWM-L

PWM is pulled down by a resistor, so in case of open input the PWM is "L".

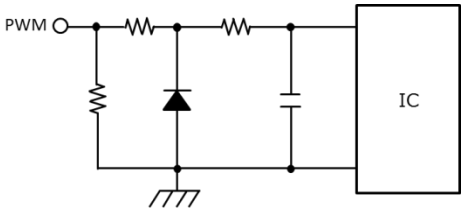

Figure 4. PWM I/O equivalence circuits

■FLT-H,FLT-L

FLT is open drain output. Normal：“L” When Fault："Hi-Z"

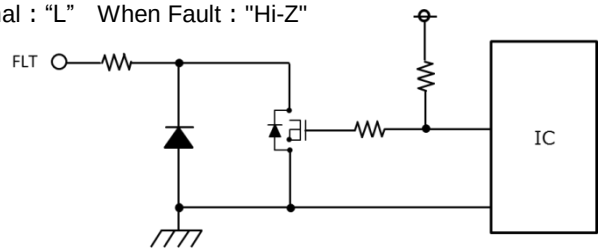

Figure 5. FLT I/O equivalence circuits

■$\overline{\text{ENA}}$

ENA is pulled up by a resistor, so in case of open input, the ENA is "H".

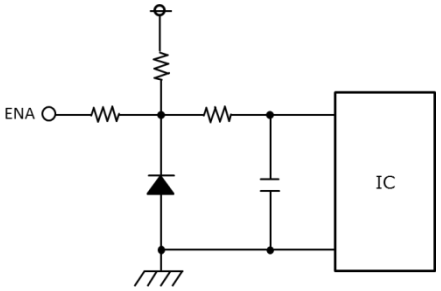

Figure 6. ENA I/O equivalence circuits

■TH

TH is output pin of the Thermistor voltage in SiC module.

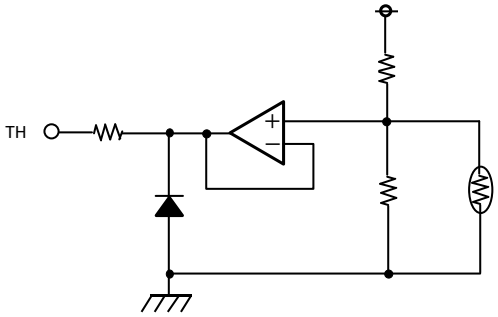

Figure 7. TH I/O equivalence circuits

© 2020 ROHM Co., Ltd.

4. Functions

4.1 Descriptions of Functions

■ Gate Drive

Gate drive circuit consists of gate driver IC and push-pull circuit. Power supply of the secondary side is supplied with a fly-back power supply. The Gate drive output voltage is +19V/-4V.

■ Fly-back power supply

Fly-back power supply consists of ROHM's Isolated Fly-back Converter (BD7F200EFJ) and transformer. For modification of the output voltage, please check the datasheet of BD7F200EFJ.

■ Short Circuit Protection (SCP)

When the Drain-Source voltage of SiC module during on state exceeds V_{SCDET}, SCP function will be activated. As consequence, the gate drive output will be set to "L" level and the SiC module will be turned off through a soft turn-off resistance. The FLT signal will be set to "Hi-Z" level. This protection will be latched. To restart the fault state, the ENA pin must have a rising edge (L to H transition), and Drain-Source voltage of SiC module must be less than V_{SCDET}. When the SCP function is released, FLT will be set to "L" level and the gate drive output will be enabled again.

■ Under Voltage Protection of Power Supply Voltage (UVP1)

When the power supply voltage (V_{CC}) drops below V_{CC1UV}, the gate drive output will be set to "L" level and FLT will be set to "Hi-Z" level. When the power supply voltage (V_{CC}) exceeds V_{CC1UVC}, FLT will be set to the "L" level and the gate drive output will be enabled.

■ Under Voltage Protection of Gate Drive Positive bias Voltage (UVP2)

When the gate drive positive bias voltage (V_{CC2}) drops below V_{CC2UV}, the gate drive output will be set to "L" level and FLT will be set to "Hi-Z" level. When the gate drive positive bias voltage (V_{CC2}) exceeds V_{CC2UVC}, FLT will be set to the "L" level and the gate drive output will be enabled.

■ Over Voltage Protection of Gate Drive Positive bias Voltage (OVP2+)

When the gate drive positive bias voltage (V_{CC2}) exceeds V_{CC2OV}, the gate drive output will be set to "L" level and FLT will be set to "Hi-Z" level. This protection will be latched. To restart the fault state, the ENA pin must have a rising edge (L to H transition), and the gate drive positive bias voltage (V_{CC2}) must be below V_{CC2OVC}. When the OVP2+ function is released, FLT will be set to "L" level and the gate drive output will be enabled again.

■ Over Voltage Protection of Gate Drive Negative bias Voltage (OVP2-)

When the gate drive negative bias voltage (V_{EE2}) drops below V_{EE2OV}, the gate drive output will be set to "L" level and FLT will be set to the "Hi-Z" level. This protection will be latched. To restart the fault state, the ENA pin must have a rising edge (L to H transition), and the gate drive negative bias voltage (V_{EE2}) must be above V_{EE2OVC}. When the OVP2- function is released, FLT will be set to "L" level and the gate drive output will be enabled again.

■ High-Side and Low-Side Simultaneous conduction prevention

When PWM_H and PWM_L are "H" level, the gate drive output of High side and Low side will be set "L" level to prevent simultaneous conduction (short circuit).

© 2020 ROHM Co., Ltd.

■Control output ON/OFF

The gate drive output is enabled or disabled by ENA. When ENA is "L" level, output is enabled.
When ENA is "H" level or open, output is disabled.

■Fault signal (FLT)

When the SCP, UVP, or OVP function is activated, FLT will be set to "Hi-Z" level. In the case of SCP and OVP, the protection will be latched. The latch will be released, when ENA has a rising edge (L to H transition). Timing chart of FLT release is shown in Figure 8.

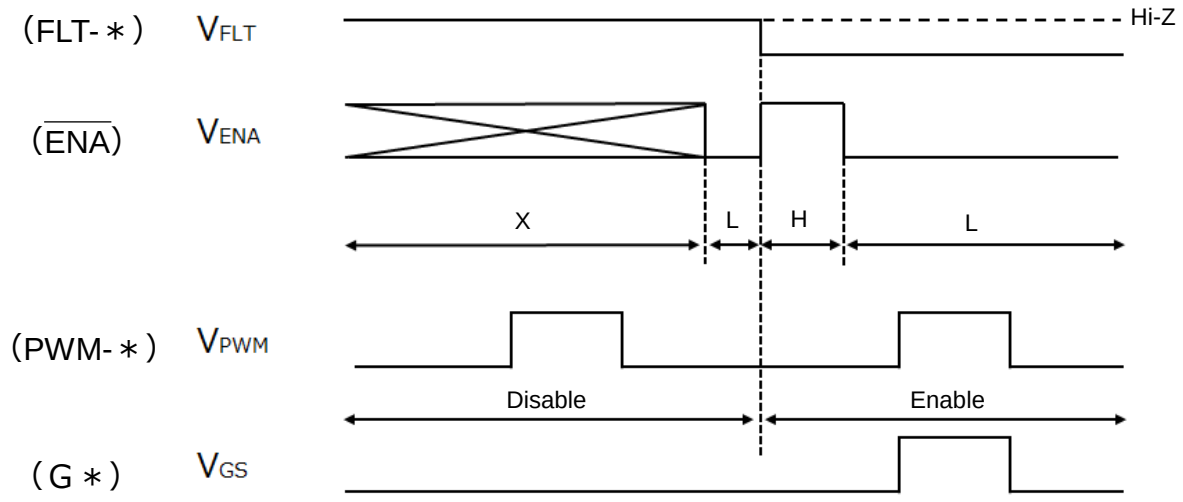

Figure 8. Timing chart of FLT release

■Temperature monitoring output

This evaluation board provides the temperature of the SiC Module, which is being measured through the internal thermistor of the Module. The Thermistor Temperature vs. The output Voltage of TH is shown in Figure 9. Table 4 shows , the resistance of thermistor and the output voltage of TH for each temperature of the thermistor.

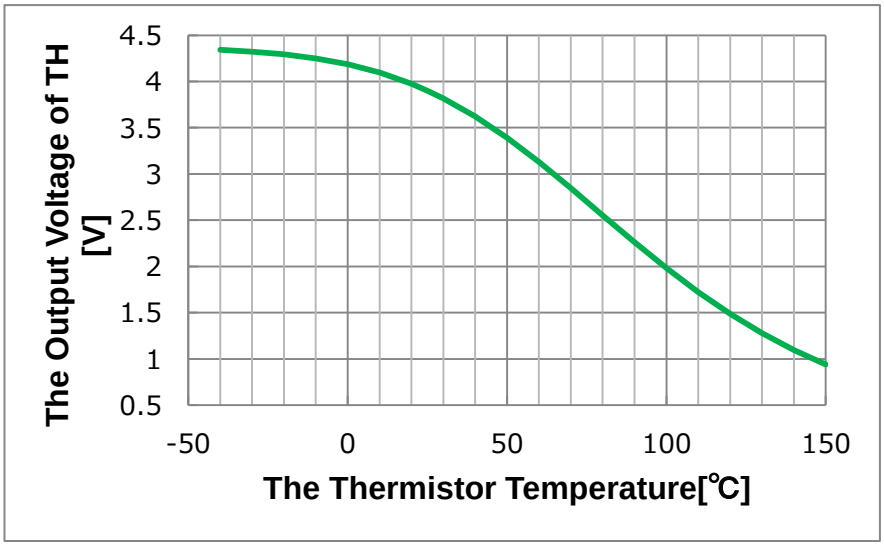

Figure 9. The Thermistor Temperature vs. The Output Voltage of TH

© 2020 ROHM Co., Ltd.

Table 4. Correspondence table about The Thermistor Temperature,
The resistance of Thermistor and The Output Voltage of TH

t [℃]	R [Ω]	The Output Voltage of TH [V]	t [℃]	R [Ω]	The Output Voltage of TH [V]
-40	99620	4.342	55	1759	3.265
-35	75310	4.334	60	1505	3.132
-30	57490	4.323	65	1292	2.992
-25	44310	4.310	70	1114	2.849
-20	34450	4.294	75	964.0	2.703
-15	27000	4.274	80	837.2	2.555
-10	21340	4.250	85	729.7	2.408
-5	16980	4.220	90	638.3	2.262
0	13620	4.185	95	560.4	2.120
5	10990	4.144	100	493.6	1.982
10	8926	4.095	105	436.2	1.849
15	7295	4.039	110	386.7	1.722
20	5996	3.974	115	343.9	1.602
25	4955	3.900	120	306.7	1.487
30	4117	3.817	125	274.3	1.380
35	3439	3.725	130	245.9	1.279
40	2888	3.623	135	221.1	1.185
45	2437	3.512	140	199.3	1.097
50	2066	3.393	145	180.0	1.016
			150	163.0	0.940

4.2 I/O Condition Table

I/O Conditions are described in Table 5.

Table 5. I/O Condition

No.	Status	INPUT				OUTPUT		
		VCC	VCC2	$\overline{ENA}$	PWM-×	TH	FLT-×	SiC-MOSFET
1	UVP1	UVP	○	×	×	×	Hi-Z	OFF
2	UVP2	○	UVP	×	×	×	Hi-Z	OFF
3	OVP2+	○	OVP	×	×	×	Hi-Z	OFF
4	OVP2-	○	OVP	×	×	×	Hi-Z	OFF
5	SCP	○	○	L	H	×	Hi-Z	OFF
6	Disable	○	○	H	×	×	L	OFF
7	Normal operation L input	○	○	L	L	×	L	OFF
8	Normal operation H input	○	○	L	H	×	L	ON -Note

○：>UVP,<OVP、 ×：Don't care

Note: In case of both PWM-H and PWM-L are "H" level, SiC-MOSFET is "OFF".
(High-Side and Low-Side Simultaneous conduction prevention)

© 2020 ROHM Co., Ltd.

4.3 Function block diagram

Function block diagram is shown in Figure 10. Driving, Logic and Protection functions are highlighted.

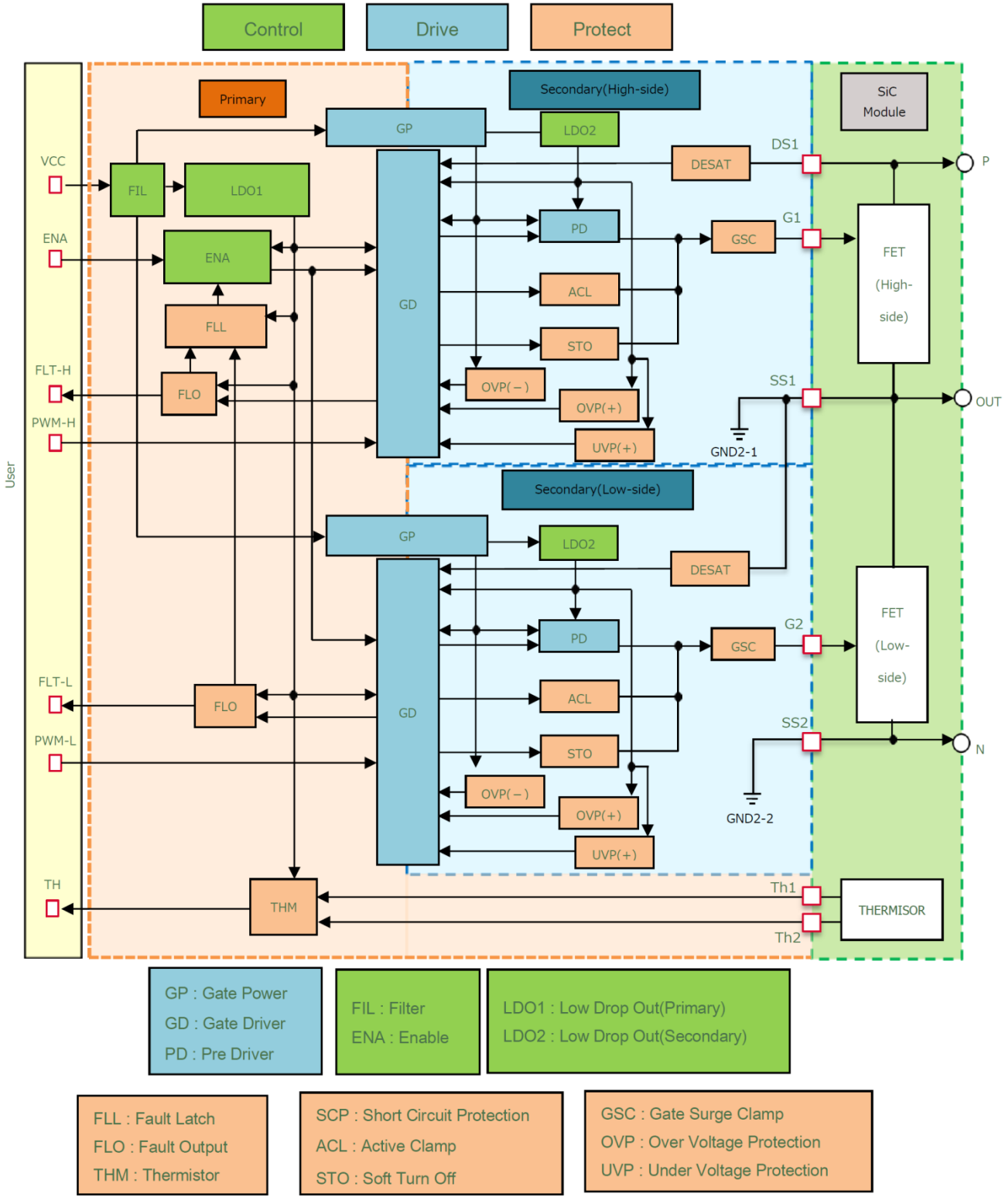

Figure 10. Function block diagram

5. Specification

Recommended operating conditions are described in Table 6, and electrical characteristics in Table 7.

Table 6. Recommended Operating Conditions

Parameter	Symbol	Conditions	MIN	TYP	MAX	Unit
Power Supply	V_{CC}		21.5	24	26.5	V
PWM High level input voltage	V_{PWM}		2.0	-	5	V
PWM Low level input voltage			0	-	0.8	
Switching Frequency	f_{PWM}		-	80	100	kHz
Operating Temperature	t_{OP}		-40	25	85	℃

Table 7.Electrical Characteristics

Parameter	Symbol	Conditions	MIN	TYP	MAX	Unit
Gate drive output High voltage	V_{CC2}		-	19	-	V
Gate drive output Low voltage	V_{EE2}		-	-4	-	V
Under Voltage Protection of Power Supply Voltage(V_{CC})	V_{CC1UV}	Active voltage	-	13.8	-	V
	V_{CC1UVC}	Release voltage	-	15.3	-	
Under Voltage Protection of Gate Drive Positive bias Voltage(V_{CC2})	V_{CC2UV}	Active voltage	-	14.9	-	V
	V_{CC2UVC}	Release voltage	-	15.6	-	
Over Voltage Protection of Gate Drive Positive bias Voltage(V_{CC2})	V_{CC2OV}	Active voltage	-	21.5	-	V
	V_{CC2OVC}	Release voltage	-	21.3	-	
Over Voltage Protection of Gate Drive Negative bias Voltage(V_{EE2})	V_{EE2OV}	Active voltage	-	-5.4	-	V
	V_{EE2OVC}	Release voltage	-	-4.7	-	
Short Circuit detection voltage	V_{SCDET}	Between Darin and Source	-	15.2	-	V
Isolation Voltage	V_{ISO}	1min	-	3750	-	Vrms

© 2020 ROHM Co., Ltd.

6. How to use

The following steps describe how to use evaluation board. If you do not follow these steps, the SiC module and Evaluation board could be destroyed.

6.1 Gate resistors and Soft Turn-off Resistors

MOSFET switching speed can be adjusted by the value of gate resistors.

In initial state, gate resistors and soft turn-off resistors are not mounted.

Please mount resistors before using the evaluation board. Table 8 provides recommended values of gate resistors and the soft turn-off resistor.

6.1.1 Peripheral circuits for gate resistors and soft turn-off resistors

The SiC-MOSFET is driven by ROHM's gate driver IC BM6112FV-C. When the SCP function is activated, the MOSFET will be turned-off slowly (soft turn-off). The turn off time is based on soft turn-off resistors. The schematics are shown in Figure 11 and Figure 14

6.1.2 The mounting position of gate resistors and soft turn-off resistors

Please mount the gate resistors and soft-turn-off resistors in the position indicated by the Figure 11 until Figure 14. The recommended values of the resistor are shown in Table 8, Section 6.1.3.

© 2020 ROHM Co., Ltd.

（High side）

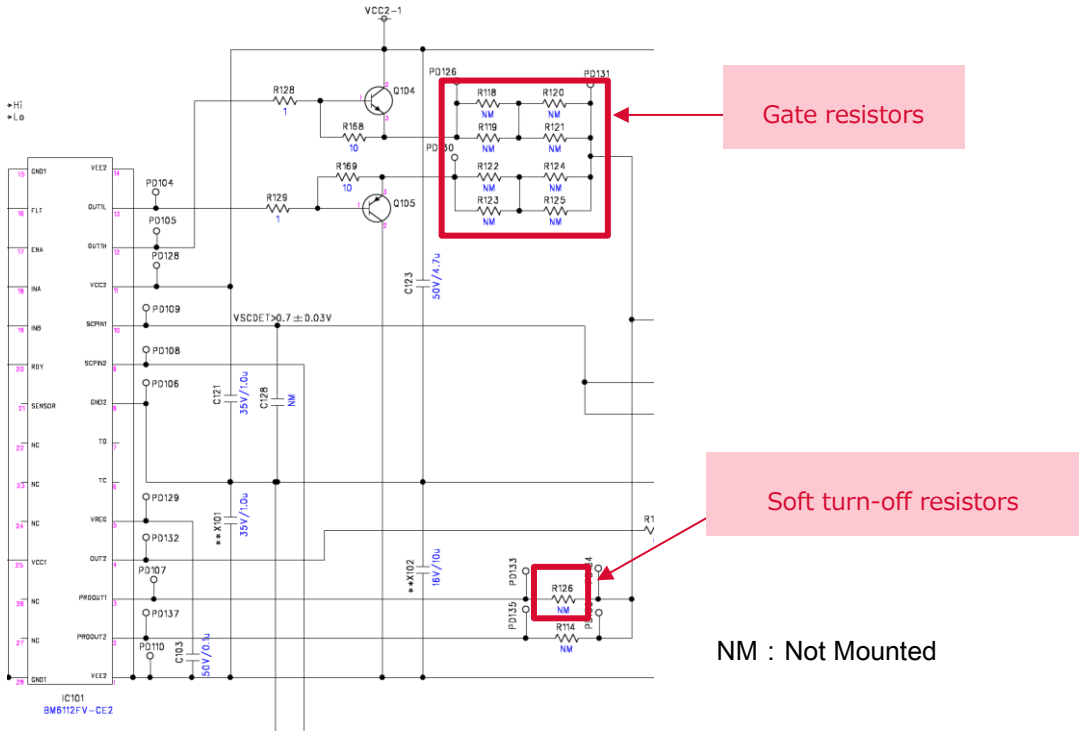

Figure 11. Peripheral circuits for gate resistors and soft turn-off resistors

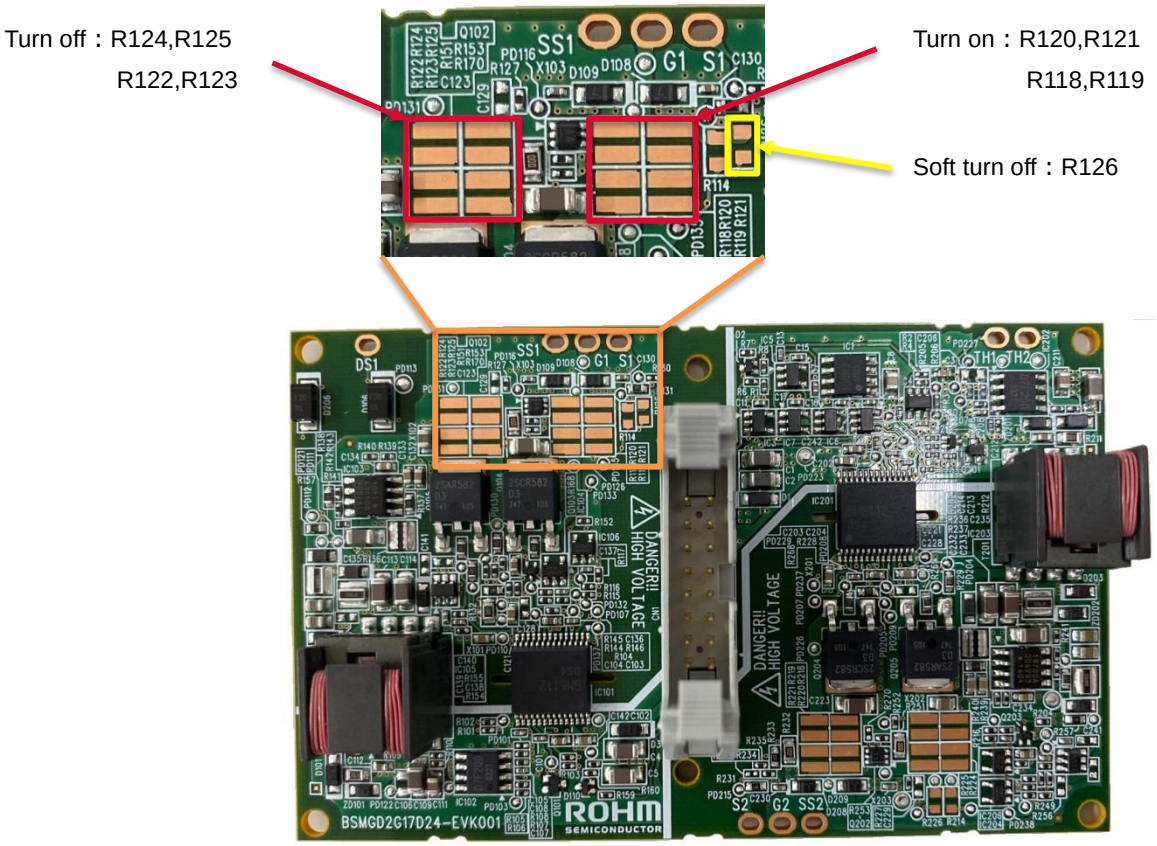

Figure 12. The mounting position of gate resistors and soft turn-off resistors

© 2020 ROHM Co., Ltd.

（Low side）

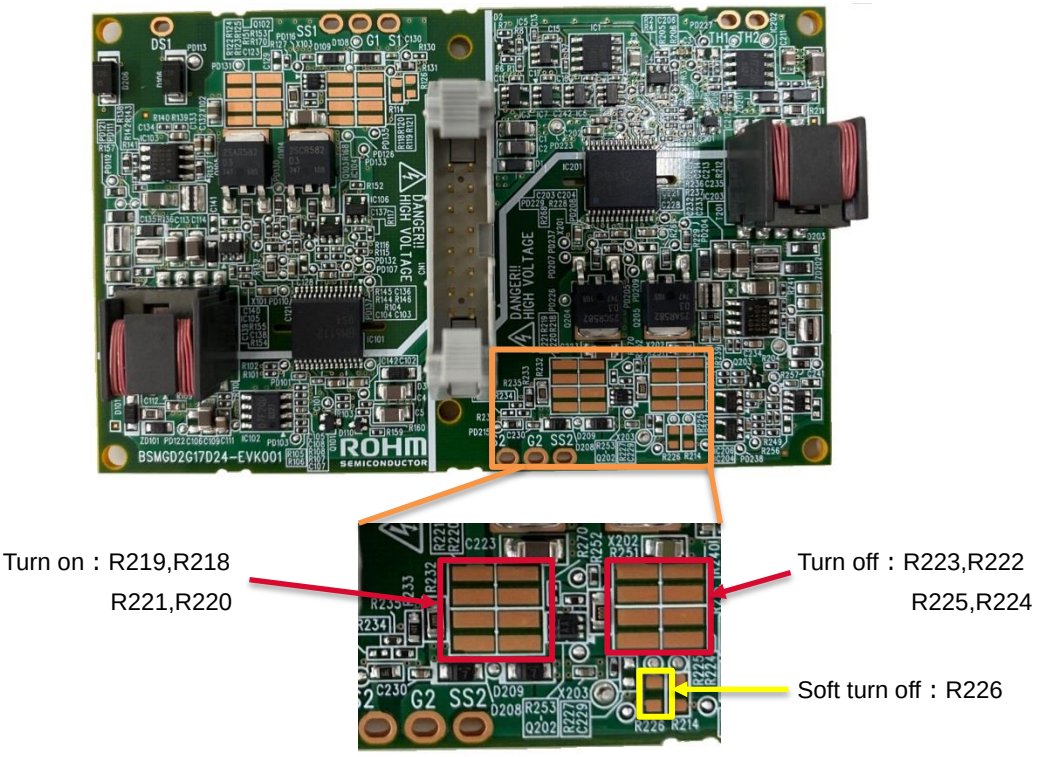

Figure 13. Peripheral circuits for gate resistors and soft turn-off resistors

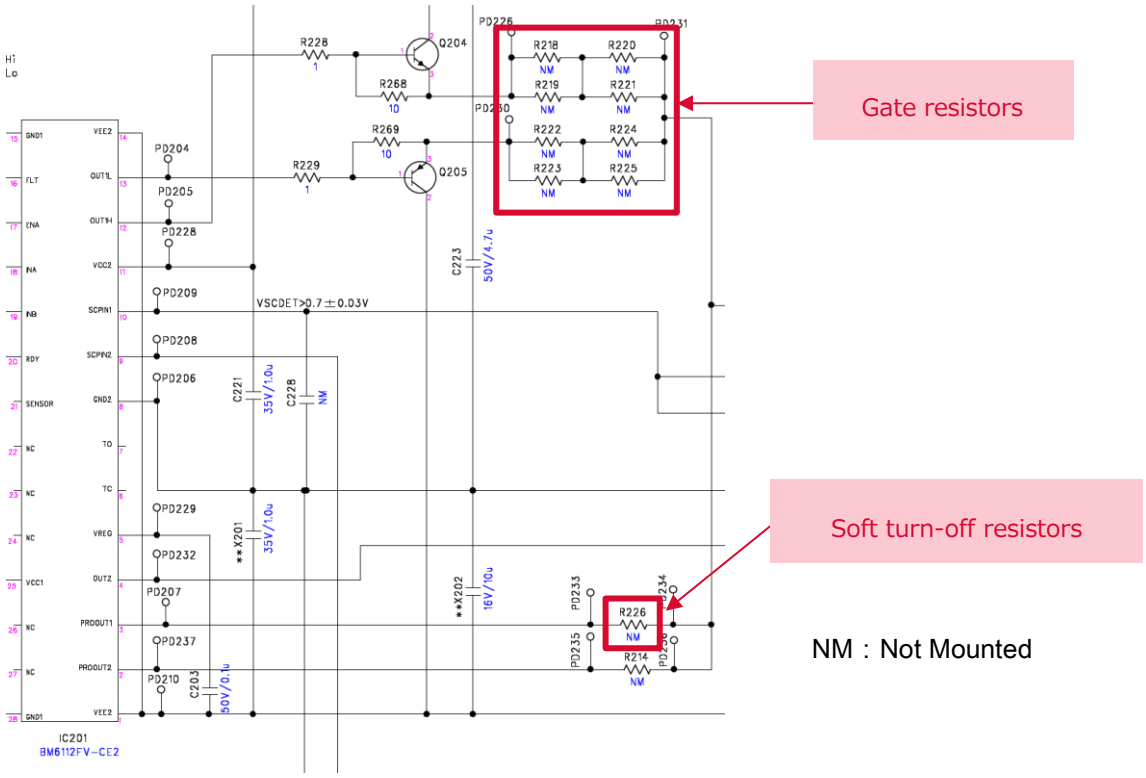

Figure 14. The mounting position of gate resistors and soft turn-off resistors

© 2020 ROHM Co., Ltd.

6.1.3 Recommended value of Gate resistors and Soft turn-off resistors

Gate resistors and soft turn-off resistors are not mounted in initial state, because their value depends on the current rating of the module, topology (Half-bridge or Chopper). Recommended value of Gate resistors and Soft turn-off resistors are described in Table 8. The value of each resistance has been optimized for our Tests conditions and Test set-up. Please consider these values as reference only.

Table 8. Recommended value about Gate resistors and Soft turn-off resistors

Module type	V_{DSS} (V)	Module Part No.	Topology	Gate Resistor		Soft turn off Resistor (ohm)
				Turn ON (ohm)	Turn OFF (ohm)	
				LTR18(1632)	LTR18(1632)	MCR10(2012)
E type	1,200	**BSM250D17P2E004**	Half bridge	10m	1	10

【The test conditions of gate resistors】

V_{DS}:1000V

I_{DS}:I_{SRM} of each module (e.g. 500A in case of BSM250D17P2E004)

Determination Criteria：The Drain–Source voltage is under the maximum rating.

【The test conditions of soft turn-off resistors】

V_{DS}:1100V

Main circuit inductance：17.6nH

Half bridge: Arm short circuit. Turn ON Low side while High side is already on with a gate-source voltage of 22V (another power supply).

Chopper：Load short circuit （Turn ON SiC-MOSFET with shorting diode by external wiring）

Determination Criteria ①：The Drain–Source voltage is under the maximum rating.

Determination Criteria ②：No breakdown

■Gate resistors

Please adjust the value of the gate resistors to not exceed the maximum rating of the drain–source voltage and the gate-source voltage at your actual application.

■Soft turn-off resistors

Please adjust soft turn-off resistors to not exceed the maximum rating of the drain–source voltage at your actual application.

© 2020 ROHM Co., Ltd.

6.2 Connecting to Evaluation board

Please use connector socket connector: 3M's 7916-F500SC, strain relief: 3M's 3448-7916, to connect evaluation board and interface board, which is included in the package of the evaluation board.

Please short GND in the interface board. If you don't short GND at interface board, there is a danger of malfunction.

■Recommended Interface Circuit

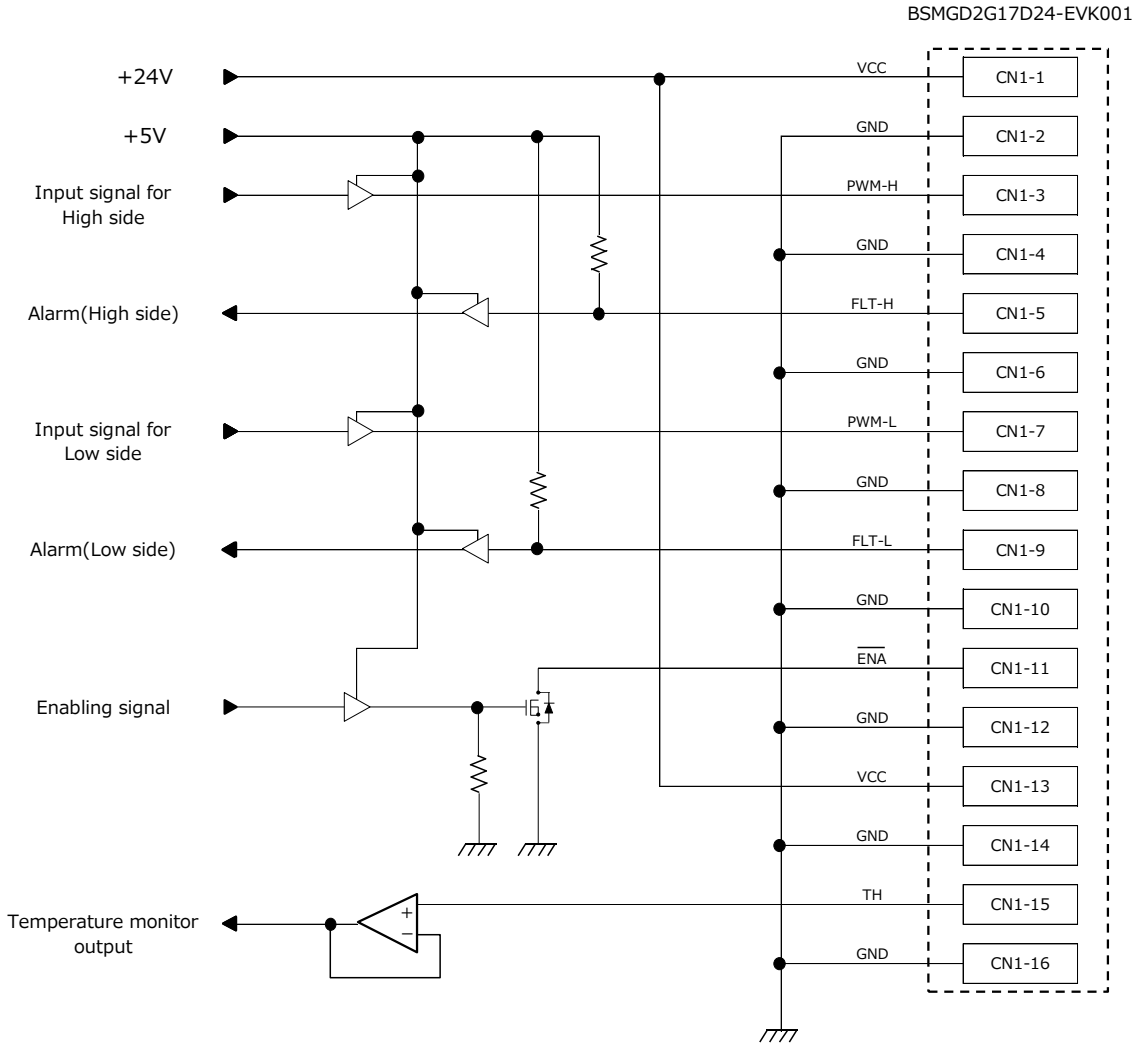

Figure 15. Recommended Interface Circuit

6.3 Power ON/OFF sequence

This evaluation board has multiple inputs for power supplies and control signals. Please be advised to follow the power on/off sequence described below. Otherwise DUT is likely to be damaged due to voltage overshoot.

In particular, please make sure the gate signal is Low before turning on this evaluation board.

Secondary side UVLO (under voltage protection of gate drive positive bias voltage) will be activated if you turn on this evaluation while the gate signal is High. In order to output the gate signal, you need to reset the latch by supplying the High signal to ENA pin.

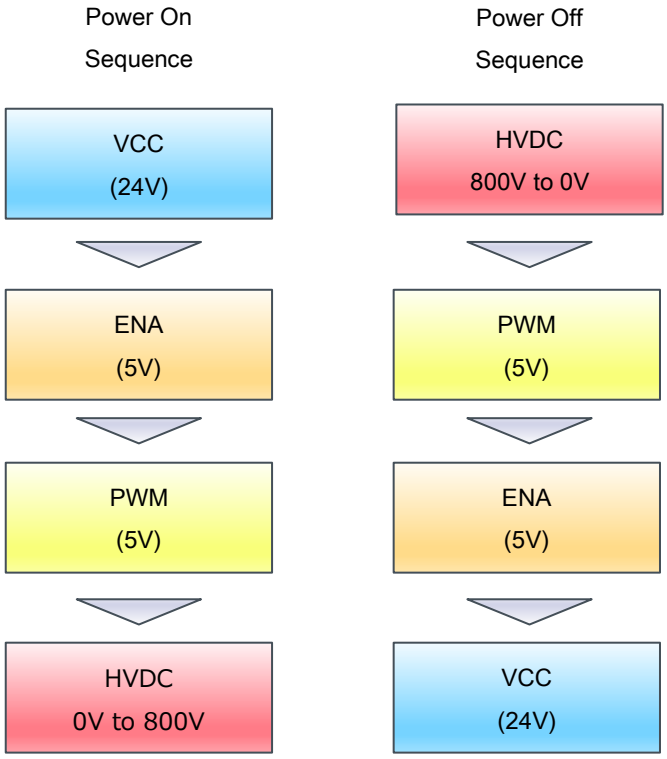

Figure 16. Power On/Off sequence

© 2020 ROHM Co., Ltd.

6.4 Attachment of SiC module

This evaluation board's pins numbering is shown in Figure 17. Please connect the same pin number of the evaluation board and SiC module.

Connect the evaluation board as close as possible to the SiC module in order to reduce the parasitic inductances. Vgs surge voltage occurs in several ns.

During attachment, remove the electrostatic charges using an ionizer, etc. in order not to breakdown by electrostatic discharge damage.

【Gate Drive Board(This Evaluation Board)】

CN1

GND	⑯ ⑮	TH
GND	⑭ ⑬	VCC
GND	⑫ ⑪	ENA
GND	⑩ ⑨	FLT-L
GND	⑧ ⑦	PWM-L
GND	⑥ ⑤	FLT-H
GND	④ ③	PWM-H
GND	② ①	VCC

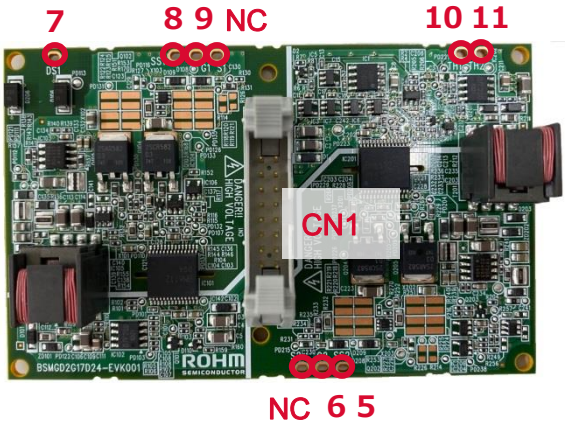

Figure 17. This evaluation board's pins numbering

【SiC Module】

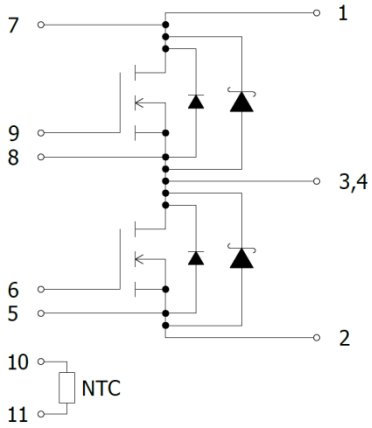

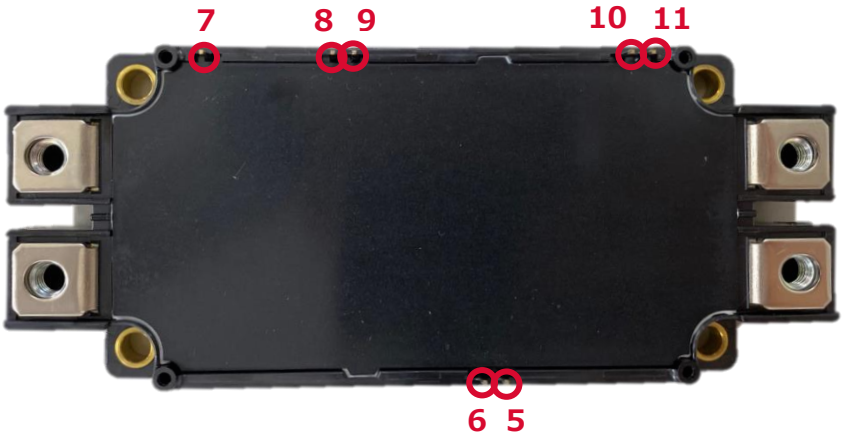

Figure 18. SiC module's pins numbering

© 2020 ROHM Co., Ltd.

【Attachment】

The assembled state of the evaluation board and SiC module is shown in Figure 19.

① The evaluation board is fixed to SiC module by M2.6 Self tapping screws which are included in the package of this evaluation board

Note1 : Tightening torque 0.8N・m

Note2 : Tighten diagonally

② Soldering terminal No.5 to 11

Figure 19. The assembled state of the evaluation board and SiC module

© 2020 ROHM Co., Ltd.

7. Protection

7-1. Short Circuit Protection (SCP)

During a short circuit, overcurrent flows and the drain-source voltage increases. This evaluation board implements short circuit detection by monitoring the drain-source voltage. If drain-source voltage during the on state of the MOSFET exceeds V_{SCDET}, SCP function will be activated.

When the SCP function is activated, the MOSFET will be turned-off slowly (soft turn-off) and FLT will be set to the "Hi-Z" level. This protection will be latched. The latch will be released, when ENA has a rising edge (L to H transition) and the drain-source voltage of SiC module is less than V_{SCDET}. When the SCP function is released, FLT will be set to the "L" level and the gate drive output will be enabled again.

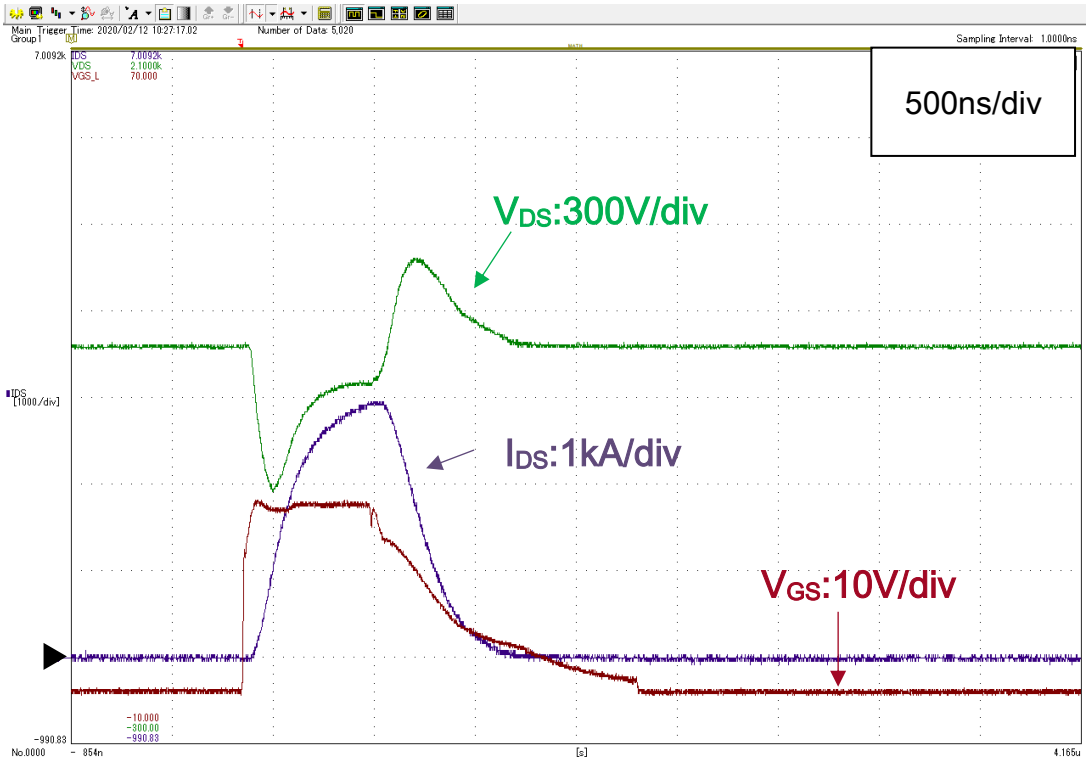

Figure 20. The SCP waveform（BSM250D17P2E004）

8. Schematics
8.1 High side Gate Drive

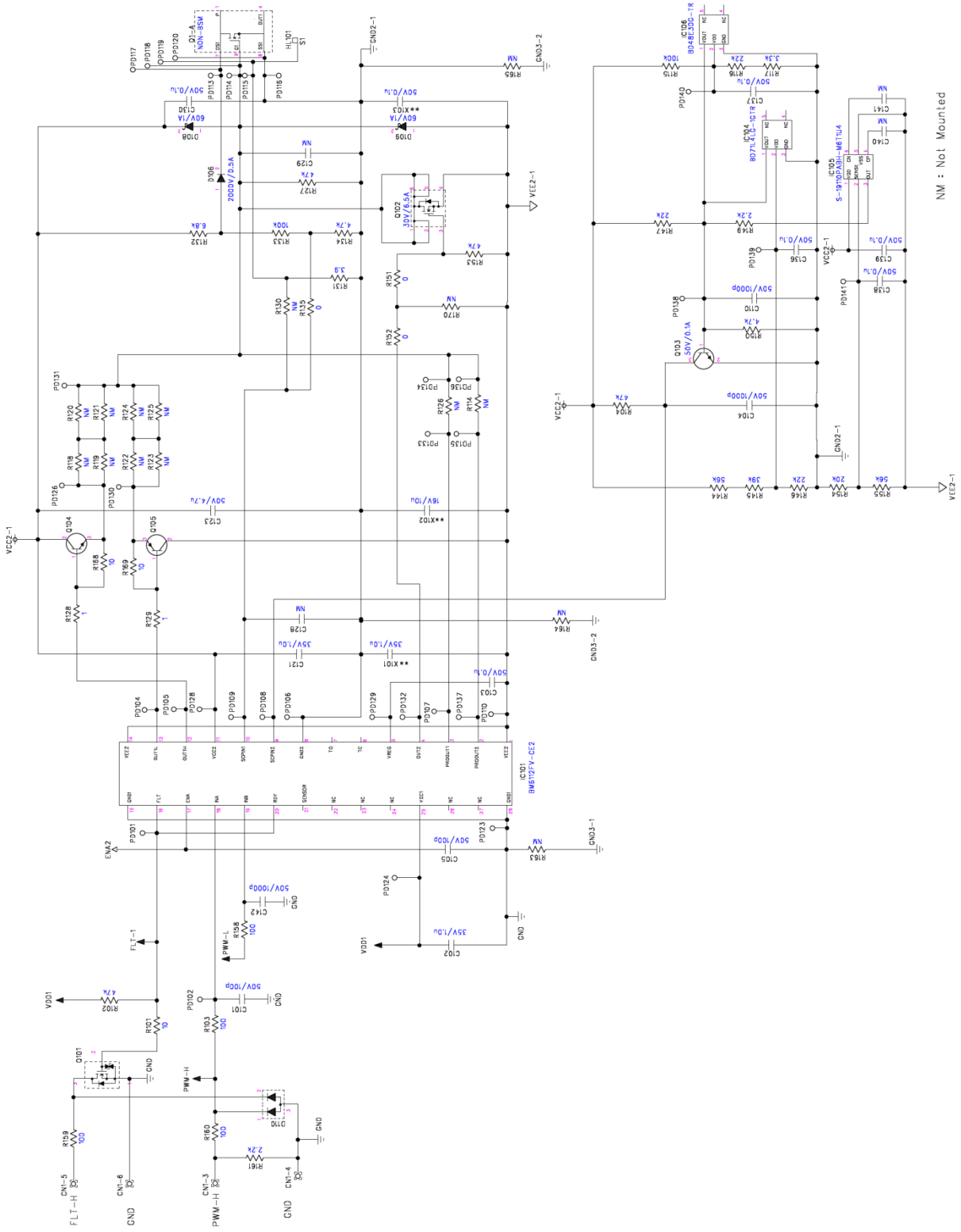

Figure 21. Schematics(High Side Gate Drive))

8.2 Low side Gate Drive

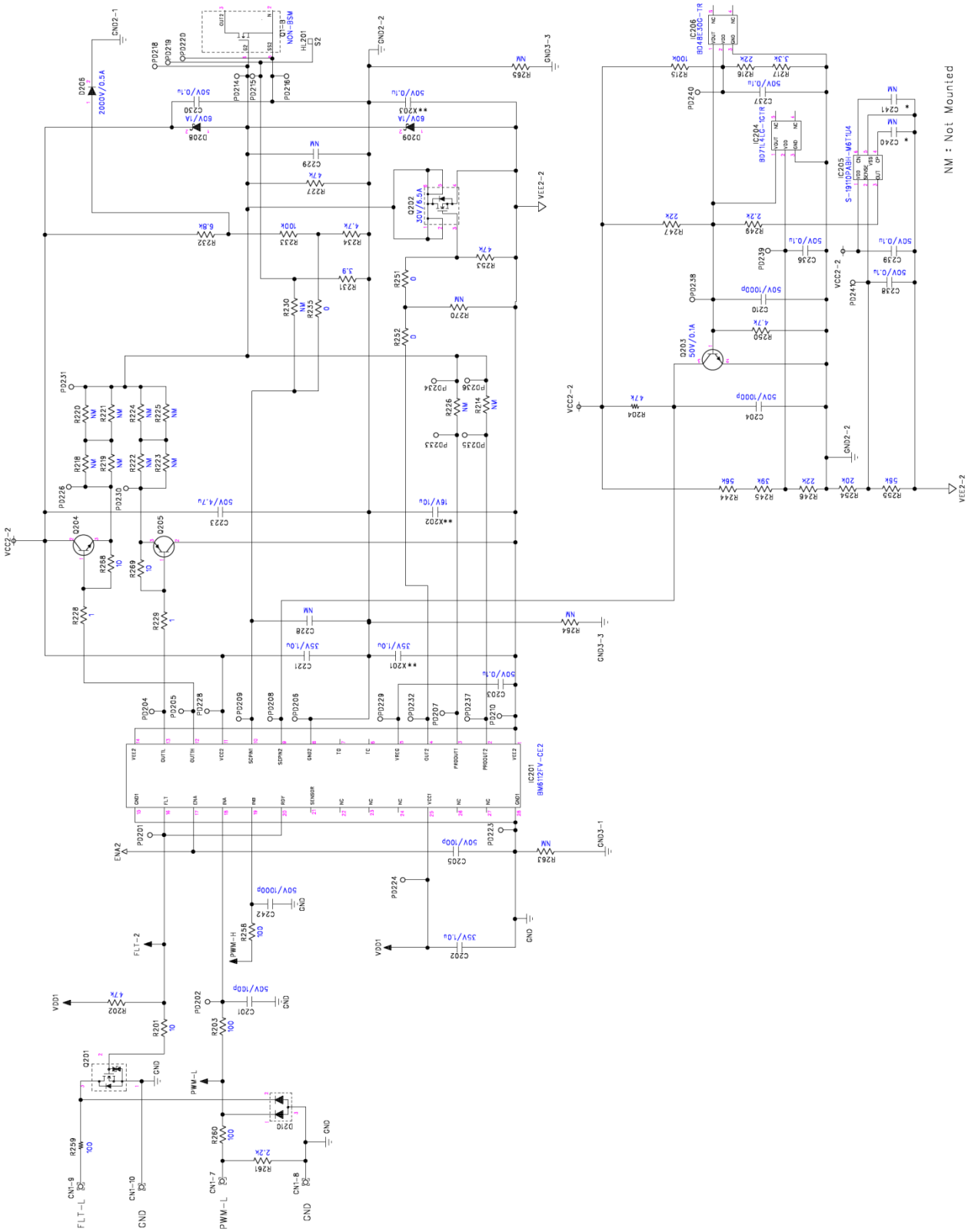

Figure 22. Schematics(Low Side Gate Drive)

8.3 Power

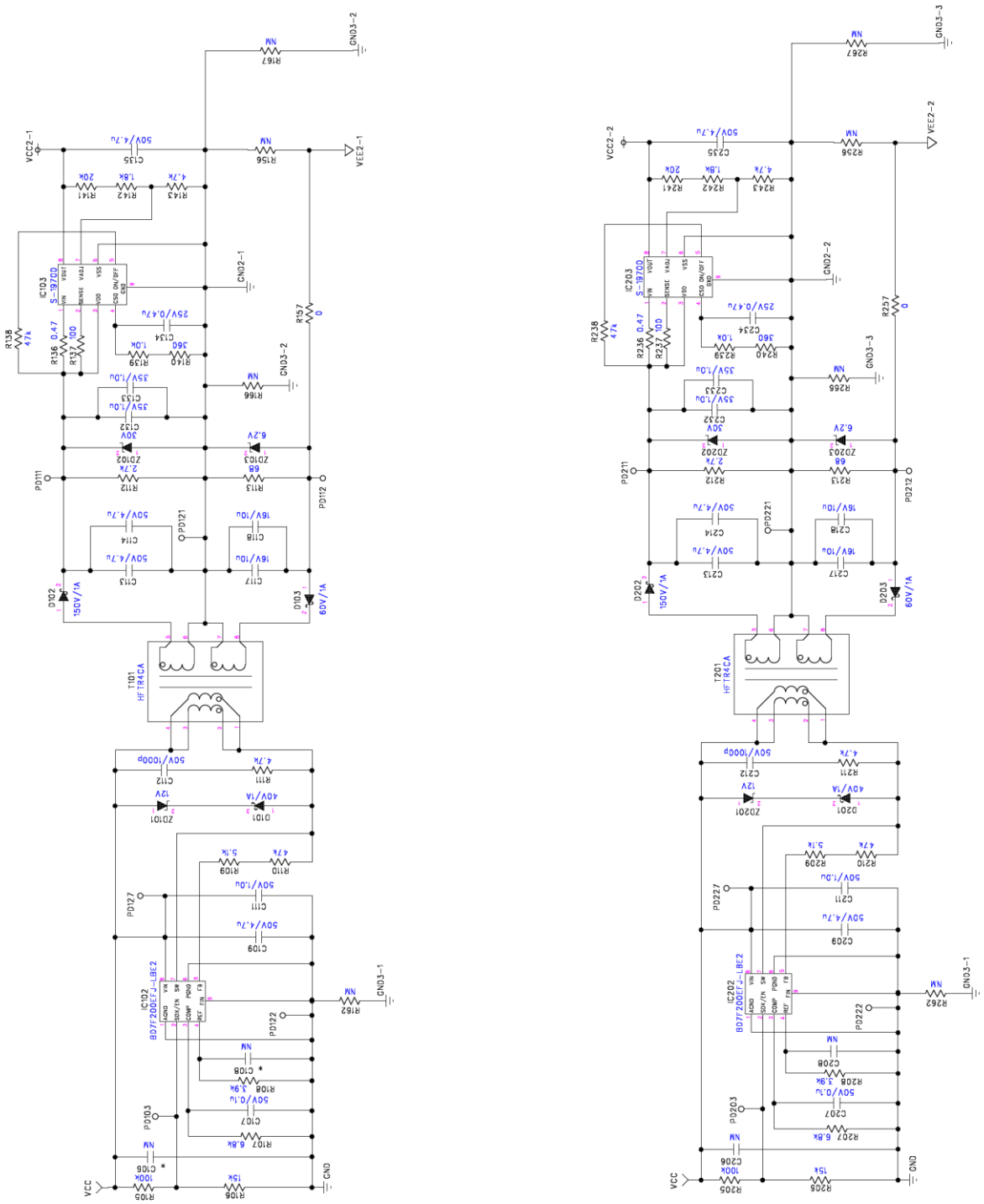

Figure 23. Schematics(Power)

© 2020 ROHM Co., Ltd.

8.4 Common

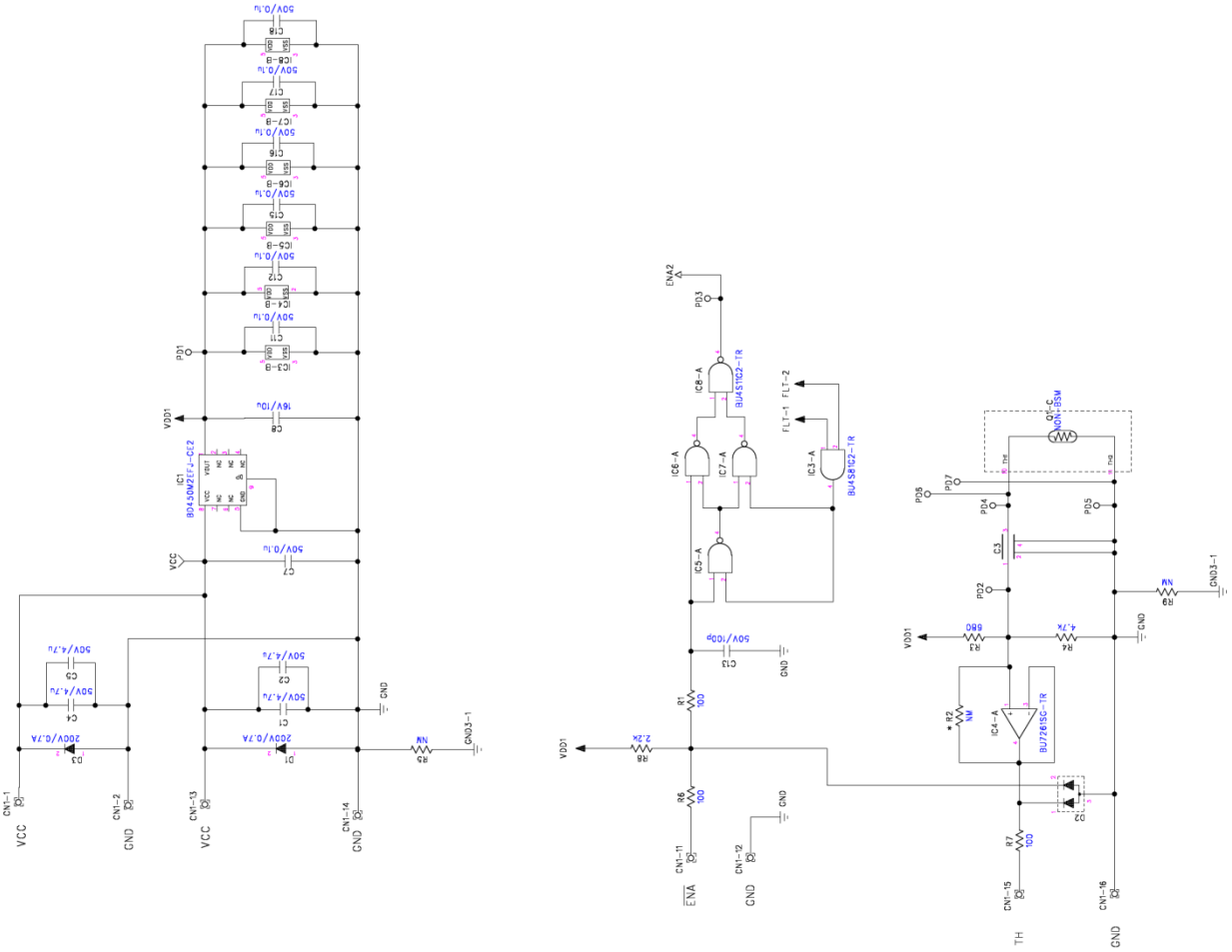

Figure 24. Schematics(Common)

© 2020 ROHM Co., Ltd.

9. Bill of Materials

Table 9. Bill of Materials (1)

Device	Mounted	Symbol	Manufacturer Model Name	Values	Manufacture	QTY
PCB	--	--	PCBE002-A	FR4,6layer,1.6mm	KYODEN *1	1
Capacitor		C1,C109,C113,C114 C123,C135,C2,C209 C213,C214,C223,C235 C4,C5,,	UMJ316BC7475KLHTE	50V,4.7μF	TAIYOYUDEN	14
Capacitor		C101,C105,C13,C201 C205,,,	UMK105CH101JVHF	50V,100pF	TAIYOYUDEN	5
Capacitor		C102,C121,C132,C133 C202,C221,C232,C233 X101,X201,,	GMK107AB7105KAHT	35V,1μF	TAIYOYUDEN	10
Capacitor		C103,C107,C11,C12 C130,C136,C137,C138 C139,C15,C16,C17 C18,C203,C207,C230 C18,C203,C207,C230 C236,C237,C238,C239 C7,X103,X203,	UMK105B7104KVHF	50V,100nF	TAIYOYUDEN	23
Capacitor		C104,C110,C112,C142 C204,C210,C212,C242	UMK107B7102KAHT	50V,1nF	TAIYOYUDEN	8
Capacitor	NOP	C106,C206,,	NON-C2012	-	-	2
Capacitor	NOP	C108,C208,,	NON-C1005	-	-	2
Capacitor		C111,C211,,	UMK212B7105KGHT	50V,1μF	TAIYOYUDEN	2
Capacitor		C117,C118,C217,C218 C8,X102,X202,	EMK212BBJ106KGHT	16V,10μF	TAIYOYUDEN	7
Capacitor	NOP	C128,C129,C140,C141 C228,C229,C240,C241	NON-C1608	-	-	8
Capacitor		C134,C234,,	TMK107B7474KAHT	25V,470nF	TAIYOYUDEN	2
Capacitor		C3,,,	NFM18CC223R1C3D	16V,22nF	murata	1
Connector		CN1,,,	3408-6002LCPL	300V,1A,16pin	3M	1
Diode		D1,D3,,	RF071MM2STR	200V/0.7A	ROHM	2
Diode		D101,D201,,	RB160MM-40TR	40V/1A	ROHM	2
Diode		D102,D202,,	RB168VAM150TR	150V/1A	ROHM	2
Diode		D103,D108,D109,D203 D208,D209,,	RB160VAM-60TR	60V/1A	ROHM	6
Diode		D106,D206,,	F1F20	2000V/0.5A	ORIGIN	2
Diode		D110,D2,D210,	EMZ6.8NTL	6.8V/150mW	ROHM	3
IC		IC1,,,	BD450M2EFJ-CE2	LDO(5V,0.2A)	ROHM	1
IC		IC101,IC201,,	BM6112FV-CE2	Driver IC	ROHM	2
IC		IC102,IC202,,	BD7F200EFJ-LBE2	PWM IC	ROHM	2
IC		IC103,IC203,,	S-19700A00A-E8T1U4	LDO(20V,0.4A)	ABLIC *2	2
IC		IC104,IC204,,	BD71L4LG-1GTR	Reset IC	ROHM	2
IC		IC105,IC205,,	S-19110PABH-M6T1U4	Reset IC	ABLIC	2
IC		IC106,IC206,,	BD48E30G-TR	Reset IC	ROHM	2

© 2020 ROHM Co., Ltd.

Table 10. Bill of Materials (2)

Device	Mounted	Symbol	Manufacturer Model Name	Values	Manufacture	QTY
IC		IC3,,,	BU4S81G2-TR	AND(single)	ROHM	1
IC		IC4,,,	BU7261SG-TR	OP amp	ROHM	1
IC		IC5,IC6,IC7,IC8	BU4S11G2-TR	NAND(single)	ROHM	4
Transistor		Q101,Q201,,	RHU003N03FRAT106	30V,300mA	ROHM	2
Transistor		Q102,Q202,,	RF6E065BNTCR	30V,6.5A	ROHM	2
Transistor		Q103,Q203,,	2SCR523EBTL	50V,100mA	ROHM	2
Transistor		Q104,Q204,,	2SCR582D3TL1	30V,10A	ROHM	2
Transistor		Q105,Q205,,	2SAR582D3TL1	-30V,-10A	ROHM	2
Resistor		R1,R103,R158,R159 R160,R203,R258,R259 R260,R6,R7,	MCR01MZPF1000	100Ω,1%,1/16W	ROHM	11
Resistor		R101,R201,,	MCR01MZPF10R0	10Ω,1%,1/16W	ROHM	2
Resistor		R102,R104,R110,R127 R153,R202,R204,R210 R227,R253,,	MCR01MZPF4702	47kΩ,1%,1/16W	ROHM	10
Resistor		R105,R115,R205,R215	MCR01MZPF1003	100kΩ,1%,1/16W	ROHM	4
Resistor		R106,R206,,	MCR01MZPF1502	15kΩ,1%,1/16W	ROHM	2
Resistor		R107,R207,,	MCR01MZPF6801	6.8kΩ,1%,1/16W	ROHM	2
Resistor		R108,R208,,	MCR01MZPF3901	3.9kΩ,1%,1/16W	ROHM	2
Resistor		R109,R209,,	MCR01MZPF5101	5.1kΩ,1%,1/16W	ROHM	2
Resistor		R111,R211,,	MCR10EZPF4701	4.7kΩ,1%,1/8W	ROHM	2
Resistor		R112,R212,,	LTR18EZPF2701	2.7kΩ,1%,3/4W	ROHM	2
Resistor		R113,R213,,	LTR18EZPF68R0	68Ω,1%,3/4W	ROHM	2
Resistor	NOP	R114,R126,R214,R226	NON-MCR10	-	-	4
Resistor		R116,R146,R147,R216 R246,R247,,	MCR01MZPF2202	22kΩ,1%,1/16W	ROHM	6
Resistor		R117,R217,,	MCR01MZPF3301	3.3kΩ,1%,1/16W	ROHM	2
Resistor	NOP	R118,R119,R120,R121 R122,R123,R124,R125 R218,R219,R220,R221 R222,R223,R224,R225	NON-LTR18	-	-	16
Resistor		R128,R129,R228,R229	MCR03EZPFL1R00	1Ω,1%,1/10W	ROHM	4
Resistor	NOP	R130,R170,R2,R230 R270,,,	NON-MCR01	-	-	5
Resistor		R131,R231,,	MCR03EZPFL3R90	3.9Ω,1%,1/10W	ROHM	2
Resistor		R132,R232,,	MCR10EZPF6801	6.8kΩ,1%,1/8W	ROHM	2
Resistor		R133,R233,,	MCR03EZPFX1003	100kΩ,1%,1/10W	ROHM	2
Resistor		R134,R143,R150, R234,R243,R250,R4	MCR01MZPF4701	4.7kΩ,1%,1/16W	ROHM	7
Resistor		R135,R152,R235,R252	MCR01MZPJ000	0Ω,1A	ROHM	4

© 2020 ROHM Co., Ltd.

Table 11. Bill of Materials (3)

Device	Mounted	Symbol	Manufacturer Model Name	Values	Manufacture	QTY
Resistor		R136,R236,,	LTR18EZPFLR470	0.47Ω,1%,1W	ROHM	2
Resistor		R137,R237,,	MCR03EZPFX1000	100Ω,1%,1/10W	ROHM	2
Resistor		R138,R238,,	MCR03EZPFX4702	47kΩ,1%,1/10W	ROHM	2
Resistor		R139,R239,,	MCR01MZPF1001	1kΩ,1%,1/16W	ROHM	2
Resistor		R140,R240,,	MCR01MZPF3600	360Ω,1%,1/16W	ROHM	2
Resistor		R141,R154,R241,R254	MCR01MZPF2002	20kΩ,1%,1/16W	ROHM	4
Resistor		R142,R242,,	MCR01MZPF1801	1.8kΩ,1%,1/16W	ROHM	2
Resistor		R144,R155,R244,R255	MCR01MZPF5602	56kΩ,1%,1/16W	ROHM	4
Resistor		R145,R245,,	MCR01MZPF3902	39kΩ,1%,1/16W	ROHM	2
Resistor		R149,R161,R249,R261 R8,,,	MCR01MZPF2201	2.2kΩ,1%,1/16W	ROHM	5
Resistor		R151,R251,,	MCR10EZPJ000	0Ω,2A	ROHM	2
Resistor	NOP	R156,R162,R163,R164 R165,R166,R167,R256 R262,R263,R264,R265 R266,R267,R5,R9	NON-MCR03	-	-	16
Resistor		R157,R257,,	MCR03EZPJ000	0Ω,1A	ROHM	2
Resistor		R168,R169,R268,R269	MCR03EZPFX10R0	10Ω,1%,1/10W	ROHM	4
Resistor		R3,,,	MCR01MZPF6800	680Ω,1%,1/16W	ROHM	1
Transformer		T101,T201,,	HFTR4CA	2-output(23V/-4V)	HITACHI Ferrite *3	2
Zener Diode		ZD101,ZD201,,	TFZVTR12B	12V, 20mA	ROHM	2
Zener Diode		ZD102,ZD202,,	TFZVTR30B	30V, 20mA	ROHM	2
Zener Diode		ZD103,ZD203,,	TFZVTR6.2B	6.2V, 20mA	ROHM	2

*1. This evaluation Board of PCB design shall be made by Kyoden Co.,Ltd.
Please call if you need Full SiC module PCB design, PCB fabrication,
PCB assembly as well.Please inquire for PCB design, PCB fabrication,
PCB assembly from Web site of Kyoden Co.,Ltd.
https://www.kyoden.co.jp/rohm-sic-board/

*2. As for 'ABLIC' products, please contact ' Kanematsu Futuretech Solutions'
Because this part name is ROHM custom.
mailto:Masateru_Kojima@kft.kanematsu.co.jp

*3. Please find the website of ' Hitachi Ferrite Electronics'.
(Sales : Hitachi Materials Trading, Ltd.)
http://www.hfe.co.jp/products.htm

© 2020 ROHM Co., Ltd.

10.Layout

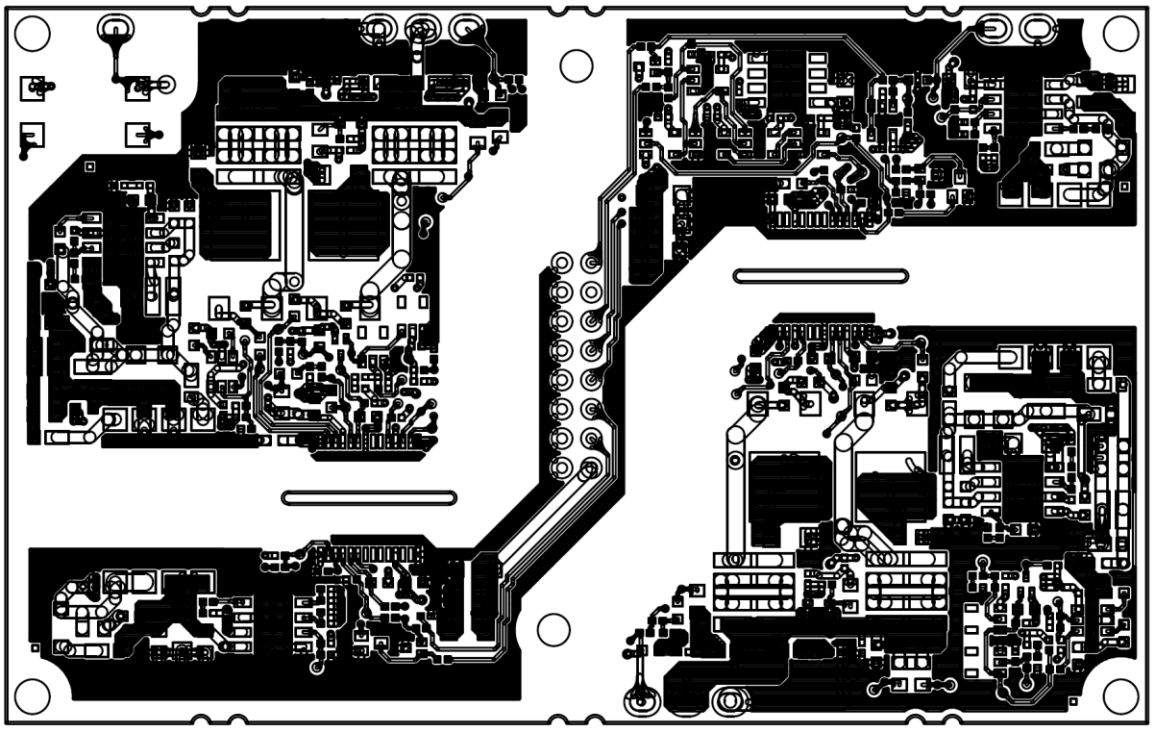

Figure 25. Top-Layer(Top view)

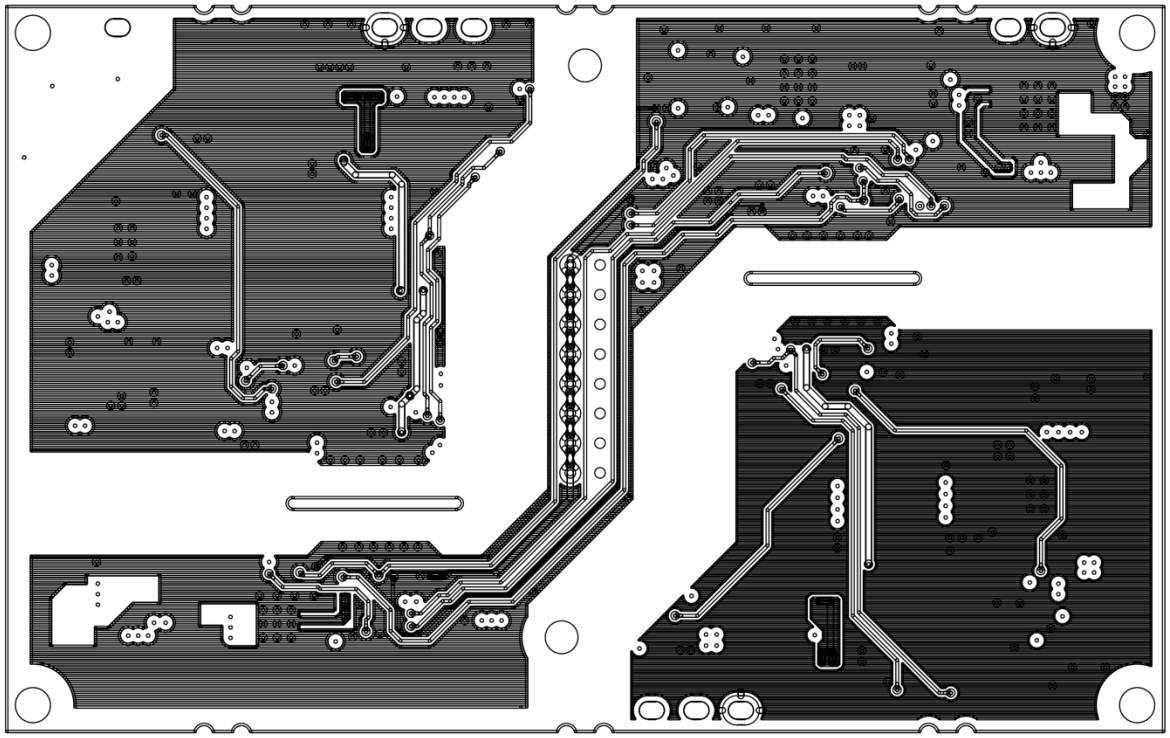

Figure 26. Layer 2(Top view)

© 2020 ROHM Co., Ltd.

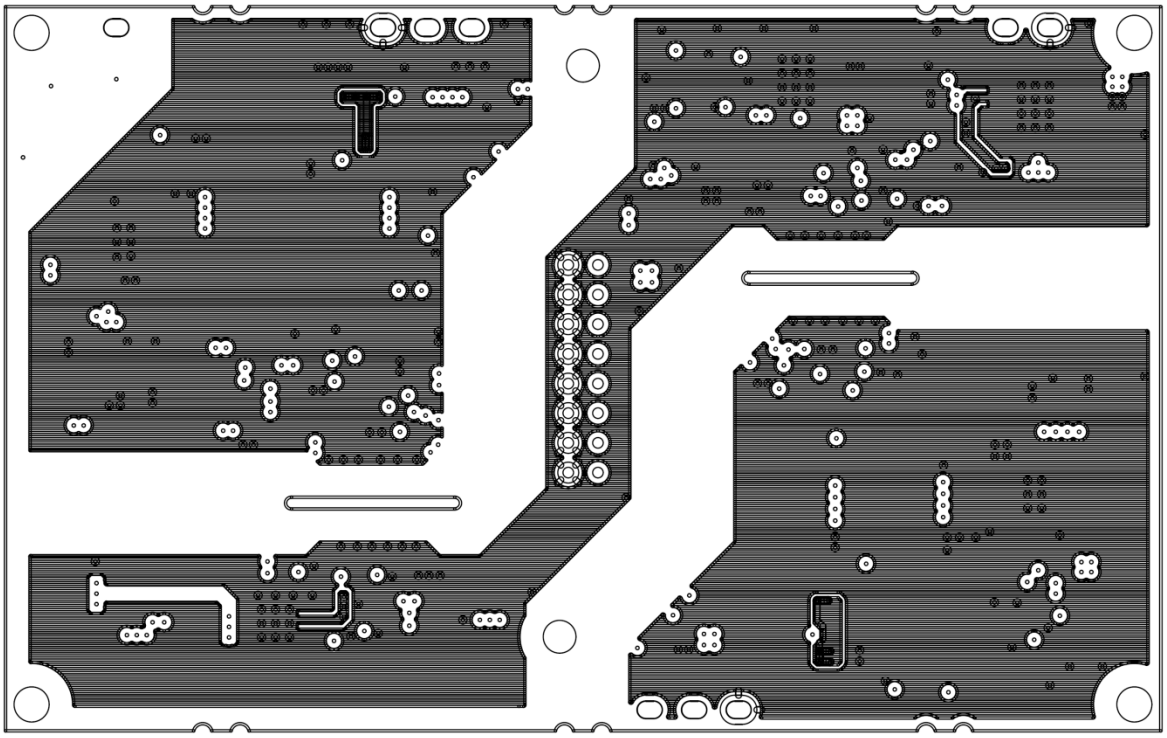

Figure 27. Layer 3(Top view)

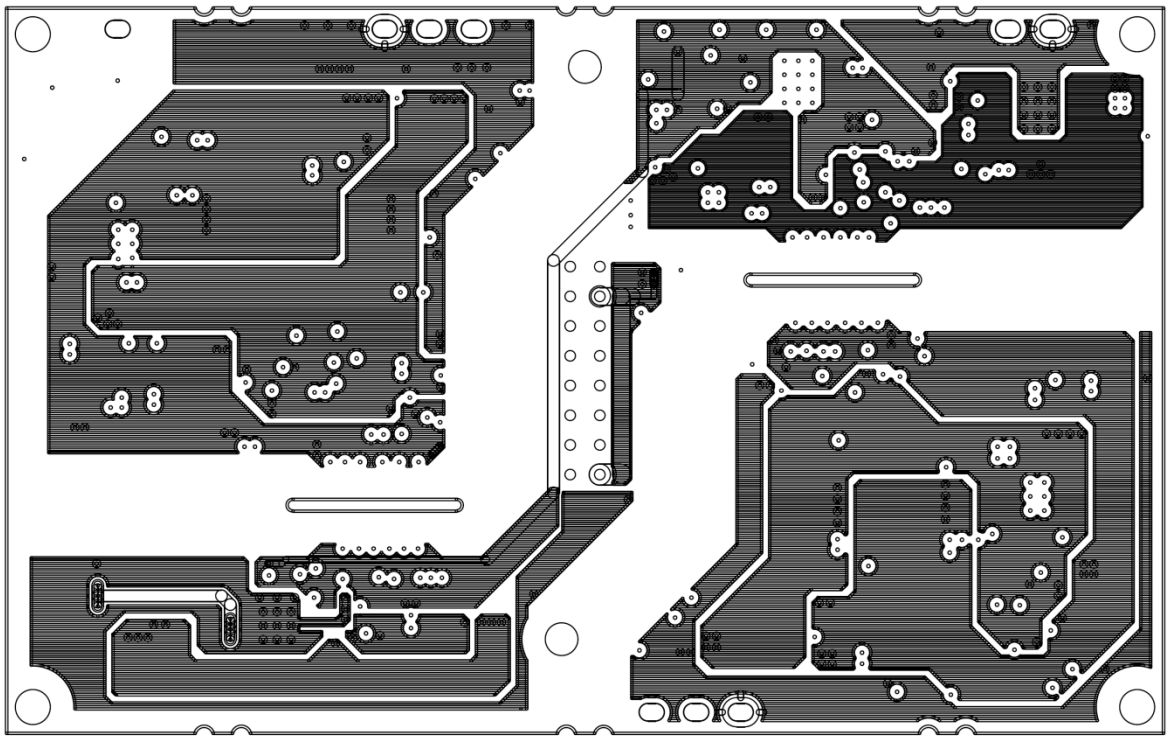

Figure 28. Layer 4(Top view)

© 2020 ROHM Co., Ltd.

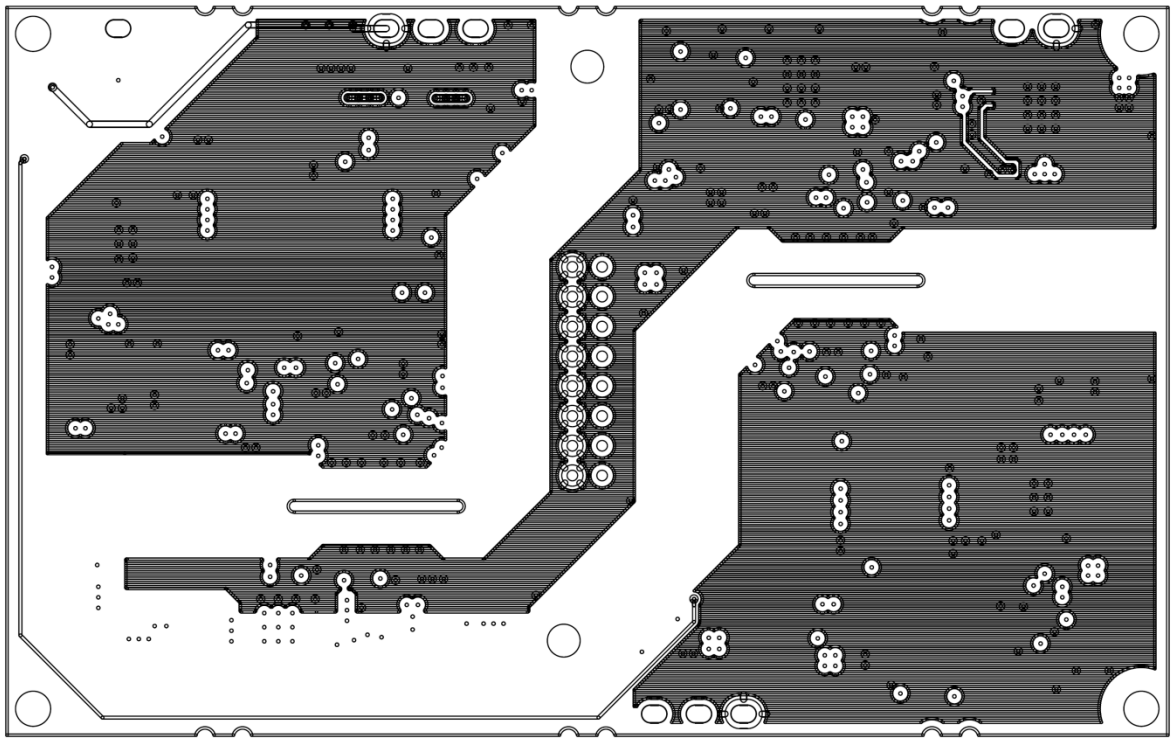

Figure 29. Layer 5(Top view)

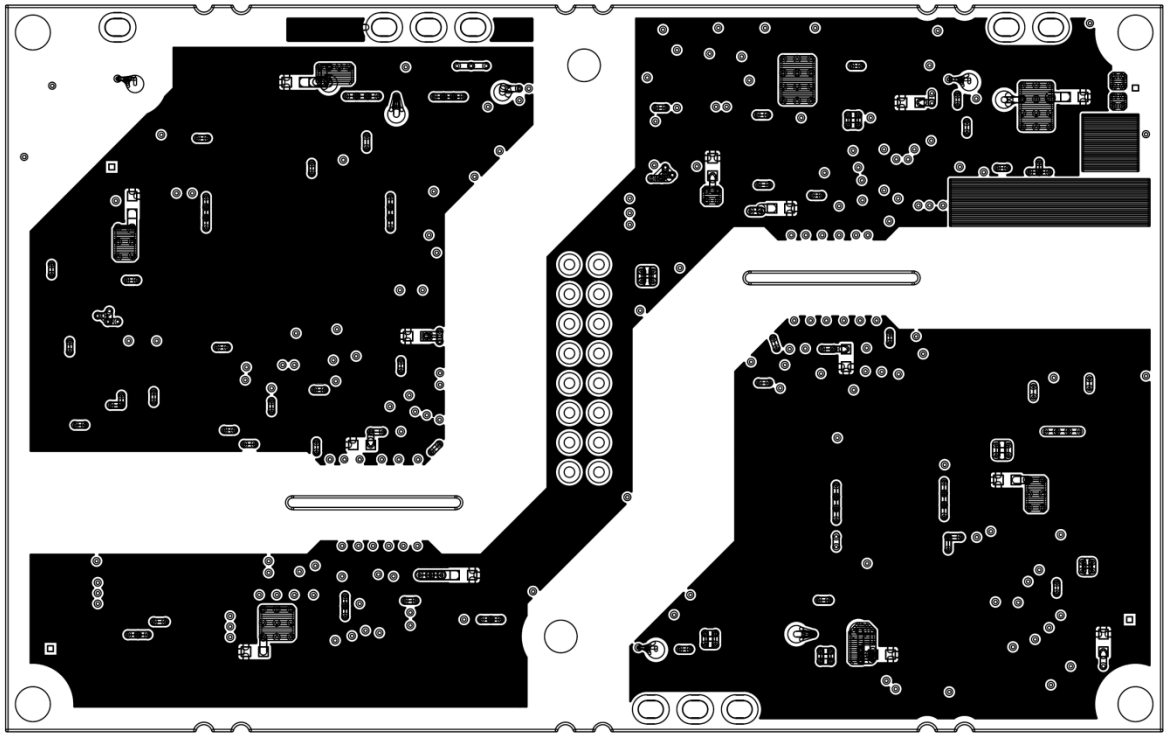

Figure 30. Bottom-Layer(Top view)

© 2020 ROHM Co., Ltd.

11. Mechanical Dimensions

Mechanical Units : mm

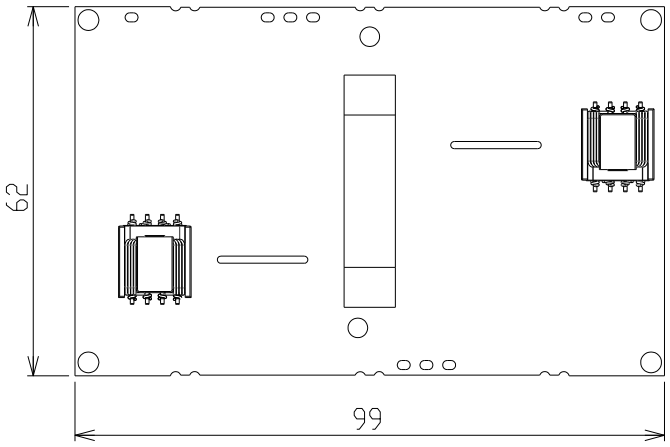

Top View

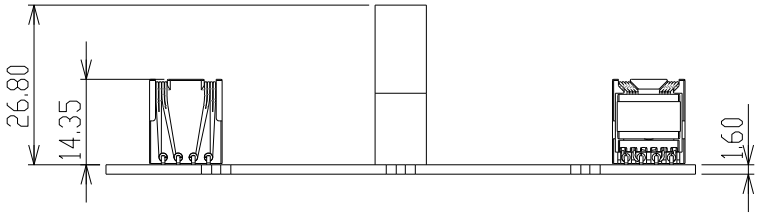

Side View

Figure 31. Mechanical Dimensions

© 2020 ROHM Co., Ltd.

Notes

1) The information contained herein is subject to change without notice.

2) Before you use our Products, please contact our sales representative and verify the latest specifications :

3) Although ROHM is continuously working to improve product reliability and quality, semiconductors can break down and malfunction due to various factors.
Therefore, in order to prevent personal injury or fire arising from failure, please take safety measures such as complying with the derating characteristics, implementing redundant and fire prevention designs, and utilizing backups and fail-safe procedures. ROHM shall have no responsibility for any damages arising out of the use of our Poducts beyond the rating specified by ROHM.

4) Examples of application circuits, circuit constants and any other information contained herein are provided only to illustrate the standard usage and operations of the Products. The peripheral conditions must be taken into account when designing circuits for mass production.

5) The technical information specified herein is intended only to show the typical functions of and examples of application circuits for the Products. ROHM does not grant you, explicitly or implicitly, any license to use or exercise intellectual property or other rights held by ROHM or any other parties. ROHM shall have no responsibility whatsoever for any dispute arising out of the use of such technical information.

6) The Products specified in this document are not designed to be radiation tolerant.

7) For use of our Products in applications requiring a high degree of reliability (as exemplified below), please contact and consult with a ROHM representative : transportation equipment (i.e. cars, ships, trains), primary communication equipment, traffic lights, fire/crime prevention, safety equipment, medical systems, servers, solar cells, and power transmission systems.

8) Do not use our Products in applications requiring extremely high reliability, such as aerospace equipment, nuclear power control systems, and submarine repeaters.

9) ROHM shall have no responsibility for any damages or injury arising from non-compliance with the recommended usage conditions and specifications contained herein.

10) ROHM has used reasonable care to ensure the accuracy of the information contained in this document. However, ROHM does not warrants that such information is error-free, and ROHM shall have no responsibility for any damages arising from any inaccuracy or misprint of such information.

11) Please use the Products in accordance with any applicable environmental laws and regulations, such as the RoHS Directive. For more details, including RoHS compatibility, please contact a ROHM sales office. ROHM shall have no responsibility for any damages or losses resulting non-compliance with any applicable laws or regulations.

12) When providing our Products and technologies contained in this document to other countries, you must abide by the procedures and provisions stipulated in all applicable export laws and regulations, including without limitation the US Export Administration Regulations and the Foreign Exchange and Foreign Trade Act.

13) This document, in part or in whole, may not be reprinted or reproduced without prior consent of ROHM.

ROHM SEMICONDUCTOR

Thank you for your accessing to ROHM product informations.
More detail product informations and catalogs are available, please contact us.

ROHM Customer Support System

http://www.rohm.com/contact/

© 2016 ROHM Co., Ltd. All rights reserved.