Comparator

Automotive Ground Sense Comparators

LM2901EZFV-C

General Description

LM2901EZFV-C is high-gain and ground sense input comparator. This IC is monolithic IC integrated quad independent comparator on a single chip.
An operating voltage range is wide with 3 V to 36 V. This comparator is the most suitable for automotive requirements such as engine control unit, electric power steering, anti-lock braking system and so on because it has features of low supply current.

Features

- AEC-Q100 Qualified(Note 1)
- Operable from Almost GND Level for Input
- Single or Dual Power Supply Operation
- Standard Comparator Pin-assignments
- Low Supply Current
- Wide Operating Supply Voltage Range
- Wide Operating Temperature Range

(Note 1) Grade 1

Applications

- Engine Control Unit
- Electric Power Steering (EPS)
- Anti-lock Braking System (ABS)
- Automotive Electronics

Key Specifications

- Operating Supply Voltage Range
  - Single Supply: 3.0 V to 36.0 V
  - Dual Supply: ±1.5 V to ±18.0 V
- Operating Temperature Range: -40 °C to +125 °C
- Low Supply Current: 1.2 mA (Typ)
- Input Offset Current: 5 nA (Typ)
- Input Bias Current: 50 nA (Typ)

Package	W (Typ) x D (Typ) x H (Max)
SSOP-B14	5.0 mm x 6.4 mm x 1.35 mm

Typical Application Circuit

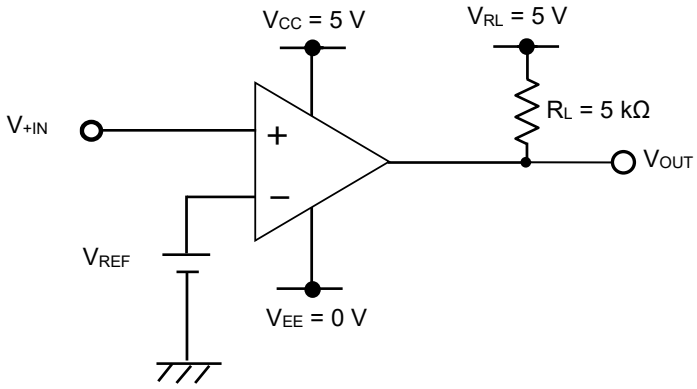

○Product structure : Silicon integrated circuit ○This product has no designed protection against radioactive rays

© 2024 ROHM Co., Ltd. All rights reserved.

Pin Configuration

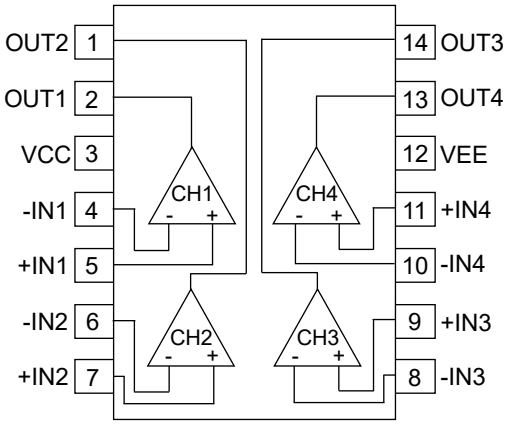

(TOP VIEW)

Pin Description

Pin No.	Pin Name	Function
1	OUT2	Output (2 ch)
2	OUT1	Output (1 ch)
3	VCC	Positive power supply
4	-IN1	Inverting input (1 ch)
5	+IN1	Non-inverting input (1 ch)
6	-IN2	Inverting input (2 ch)
7	+IN2	Non-inverting input (2 ch)
8	-IN3	Inverting input (3 ch)
9	+IN3	Non-inverting input (3 ch)
10	-IN4	Inverting input (4 ch)
11	+IN4	Non-inverting input (4 ch)
12	VEE	Negative power supply / Ground
13	OUT4	Output (4 ch)
14	OUT3	Output (3 ch)

© 2024 ROHM Co., Ltd. All rights reserved.

Block Diagram

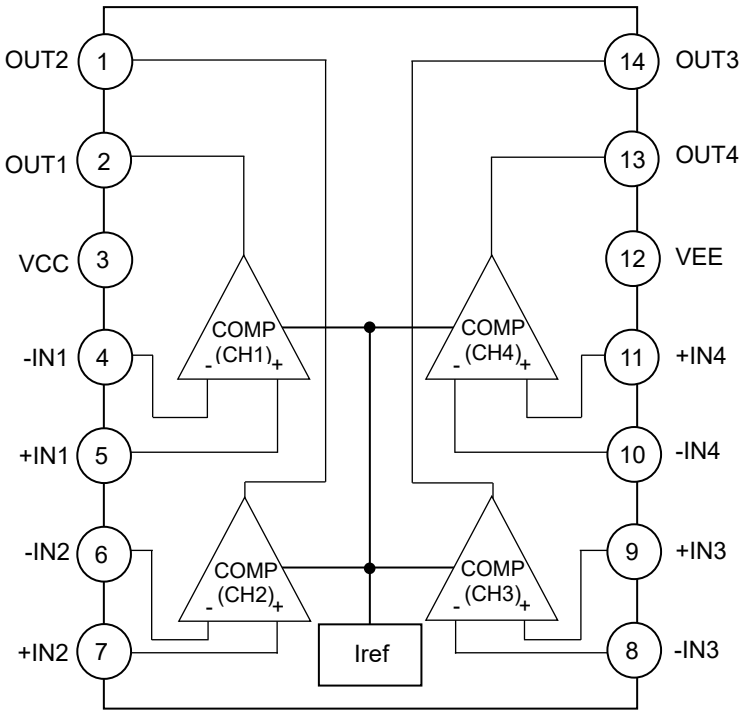

Description of Blocks

1. COMP:
   This block is a ground sense comparator with differential input stage.

2. Iref:
   This block supplies reference current which is needed to operate COMP block.

© 2024 ROHM Co., Ltd. All rights reserved.

Absolute Maximum Ratings

Parameter	Symbol	Rating	Unit
Supply Voltage	V_{CC}-V_{EE}	36	V
Differential Input Voltage(Note 1)	V_{ID}	36	V
Common-mode Input Voltage Range	V_{ICMR}	(V_{EE} - 0.3) to (V_{EE} + 36)	V
Input Current	I_I	±10	mA
Maximum Junction Temperature	Tjmax	150	°C
Storage Temperature Range	Tstg	-55 to +150	°C

Caution 1: *Operating the IC over the absolute maximum ratings may damage the IC. The damage can either be a short circuit between pins or an open circuit between pins and the internal circuitry. Therefore, it is important to consider circuit protection measures, such as adding a fuse, in case the IC is operated over the absolute maximum ratings.*

Caution 2: *Should by any chance the maximum junction temperature rating be exceeded the rise in temperature of the chip may result in deterioration of the properties of the chip. In case of exceeding this absolute maximum rating, design a PCB with thermal resistance taken into consideration by increasing board size and copper area so as not to exceed the maximum junction temperature rating.*

(Note 1) The differential input voltage indicates the voltage difference between inverting input and non-inverting input.
The input pin voltage is set to V_{EE} or more.

Thermal Resistance(Note 2)

Parameter	Symbol	Thermal Resistance (Typ)		Unit
		1s(Note 4)	2s2p(Note 5)	
SSOP-B14				
Junction to Ambient	θ_{JA}	159.6	92.8	°C/W
Junction to Top Characterization Parameter(Note 3)	Ψ_{JT}	13	9	°C/W

(Note 2) Based on JESD51-2A(Still-Air).
(Note 3) The thermal characterization parameter to report the difference between junction temperature and the temperature at the top center of the outside surface of the component package.
(Note 4) Using a PCB board based on JESD51-3.
(Note 5) Using a PCB board based on JESD51-7.

Layer Number of Measurement Board	Material	Board Size
Single	FR-4	114.3 mm x 76.2 mm x 1.57 mmt

Top	
Copper Pattern	Thickness
Footprints and Traces	70 µm

Layer Number of Measurement Board	Material	Board Size
4 Layers	FR-4	114.3 mm x 76.2 mm x 1.6 mmt

Top		2 Internal Layers		Bottom	
Copper Pattern	Thickness	Copper Pattern	Thickness	Copper Pattern	Thickness
Footprints and Traces	70 µm	74.2 mm x 74.2 mm	35 µm	74.2 mm x 74.2 mm	70 µm

Recommended Operating Conditions

Parameter		Symbol	Min	Typ	Max	Unit
Operating Supply Voltage	Single Supply	V_{CC}	3.0	-	36.0	V
	Dual Supply		±1.5	-	±18.0	
Operating Temperature		Topr	-40	+25	+125	°C

© 2024 ROHM Co., Ltd. All rights reserved.

Electrical Characteristics (Unless otherwise specified V_{CC} = 5 V, V_{EE} = 0 V)

Parameter	Symbol	Temperature Range	Limit			Unit	Conditions
			Min	Typ	Max		
Input Offset Voltage	V_{IO}	25 °C	-	2	4	mV	V_{OUT} = 1.4 V Absolute value
		-40 °C to +125 °C	-	-	5		V_{CC} = 5 V to 36 V V_{OUT} = 1.4 V Absolute value
Input Offset Current	I_{IO}	25 °C	-	5	40	nA	V_{OUT} = 1.4 V Absolute value
		-40 °C to +125 °C	-	-	50		
Input Bias Current	I_B	25 °C	-	50	250	nA	V_{OUT} = 1.4 V Absolute value
		-40 °C to +125 °C	-	-	275		
Common-mode Input Voltage Range	V_{ICMR}	25 °C	0	-	3.5	V	(V_{CC}-V_{EE}) = 5 V
		-40 °C to +125 °C	0	-	3.0		
Large Signal Voltage Gain	A_V	25 °C	88	120	-	dB	V_{CC} = 15 V V_{OUT} = 1.4 V to 11.4 V R_L = 15 kΩ, V_{RL} = 15 V
		-40 °C to +125 °C	74	-	-		
Supply Current	I_{CC}	25 °C	-	1.2	2.0	mA	V_{OUT} = Open
		-40 °C to +125 °C	-	-	2.5		V_{OUT} = Open, V_{CC} = 36 V
Output Sink Current*(Note 1)*	I_{OL}	25 °C	8	16	-	mA	V_{+IN} = 0 V, V_{-IN} = 1 V V_{OUT} = 1.5 V Absolute value
		-40 °C to +125 °C	2	-	-		
Output Saturation Voltage (Low Level Output Voltage)	V_{OL}	25 °C	-	80	200	mV	V_{+IN} = 0 V, V_{-IN} = 1 V I_{OL} = 4 mA
		-40 °C to +125 °C	-	-	400		
Output Leak Current*(Note 1)* (High Level Output Current)	I_{LEAK}	25 °C	-	0.1	-	nA	V_{+IN} = 1 V, V_{-IN} = 0 V V_{OUT} = 5 V Absolute value
		-40 °C to +125 °C	-	-	1	μA	V_{+IN} = 1 V, V_{-IN} = 0 V V_{OUT} = 36 V Absolute value
Response Time	t_{RE}	25 °C	-	1.3	-	μs	R_L = 5.1 kΩ, V_{RL} = 5 V V_{IN} = 100 mV_{P-P} Overdrive = 5 mV
			-	0.4	-		R_L = 5.1 kΩ, V_{RL} = 5 V V_{IN} = TTL Logic Swing, V_{REF} = 1.4 V
Operable Frequency	fopr	25 °C	100	-	-	kHz	R_L = 2 kΩ, V_{+IN} = 1.5 V V_{-IN} = 5 V_{P-P} (Duty 50 % Rectangular Pulse)

(Note 1) Consider the power dissipation of the IC under high temperature environment when selecting the output current value. When the output pin is short-circuited continuously, the output current may decrease due to the temperature rise by the heat generation of inside the IC.

© 2024 ROHM Co., Ltd. All rights reserved.

Typical Performance Curves

V_{EE} = 0 V

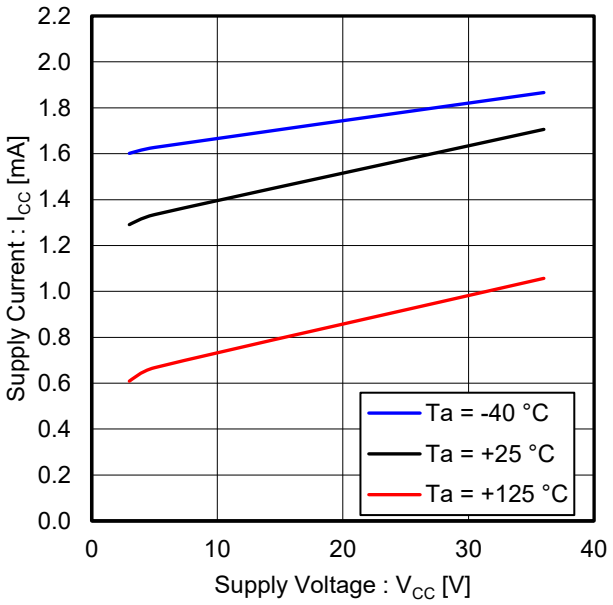

Figure 1. Supply Current vs Supply Voltage

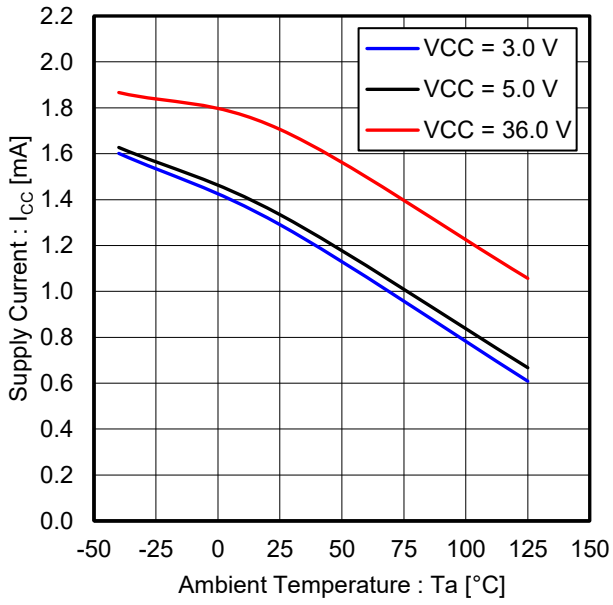

Figure 2. Supply Current vs Ambient Temperature

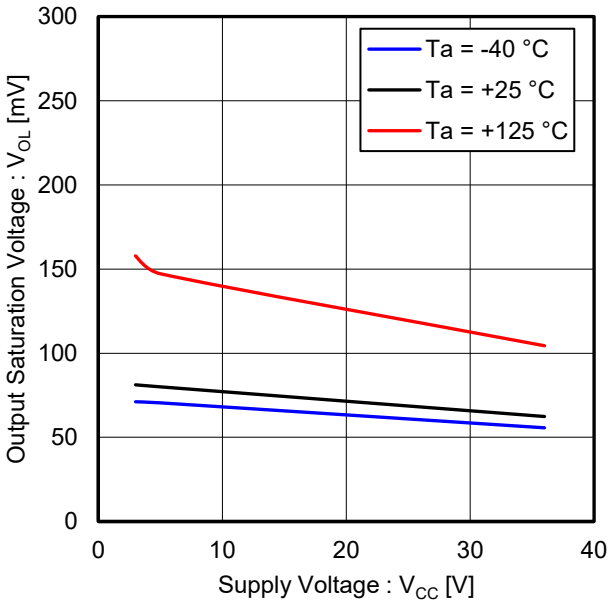

Figure 3. Output Saturation Voltage vs Supply Voltage (I_{OL} = 4 mA)

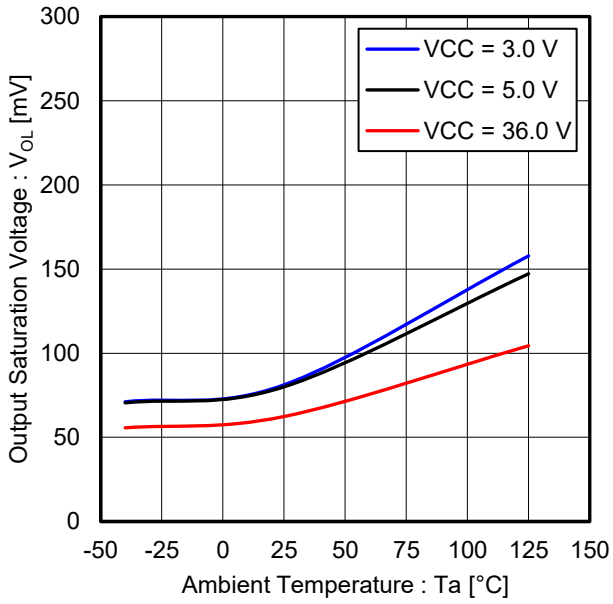

Figure 4. Output Saturation Voltage vs Ambient Temperature (I_{OL} = 4 mA)

(Note) The above data are measurement value of typical sample; it is not guaranteed.

© 2024 ROHM Co., Ltd. All rights reserved.

Typical Performance Curves - continued

V_{EE} = 0 V

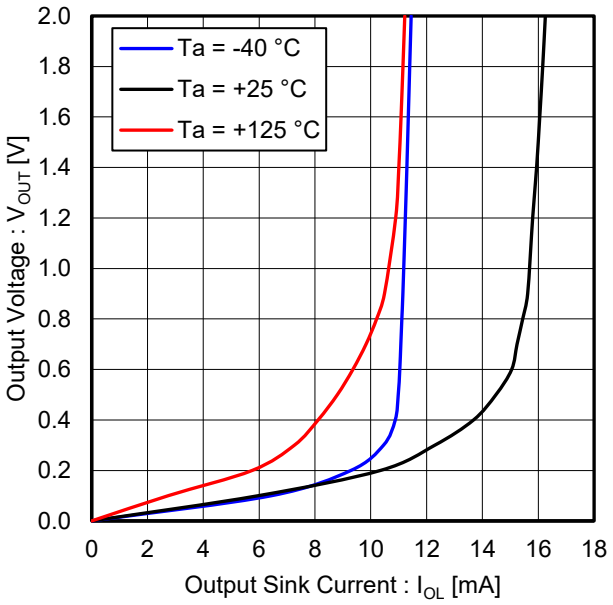

Figure 5. Output Voltage vs Output Sink Current
(V_{CC} = 5 V)

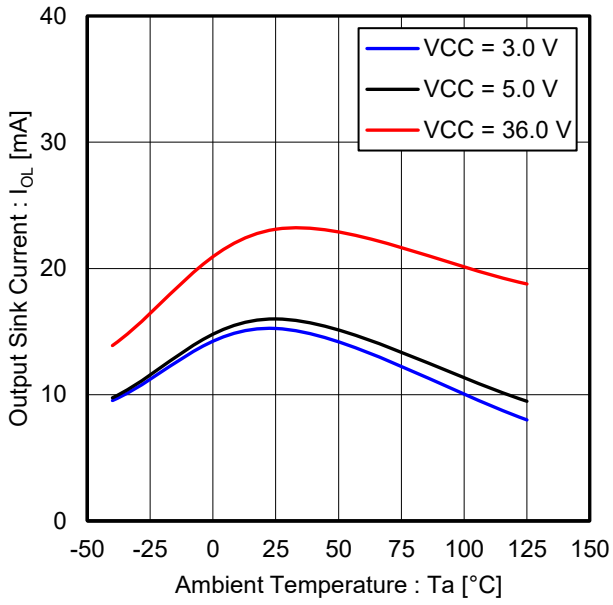

Figure 6. Output Sink Current vs Ambient Temperature
(V_{OUT} = 1.5 V)

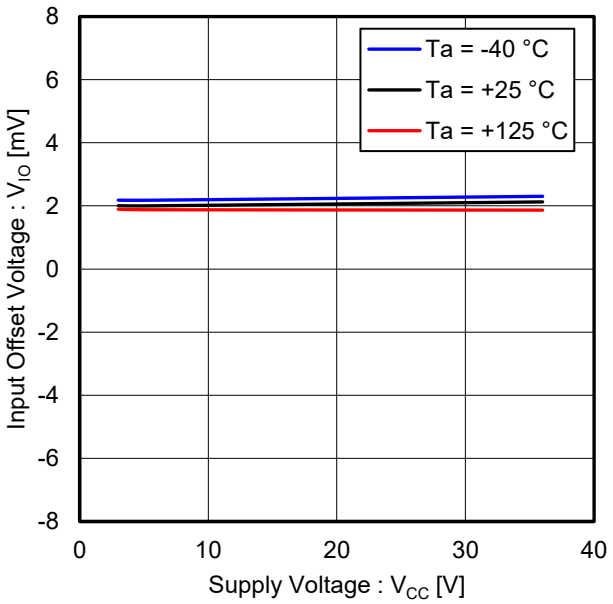

Figure 7. Input Offset Voltage vs Supply Voltage

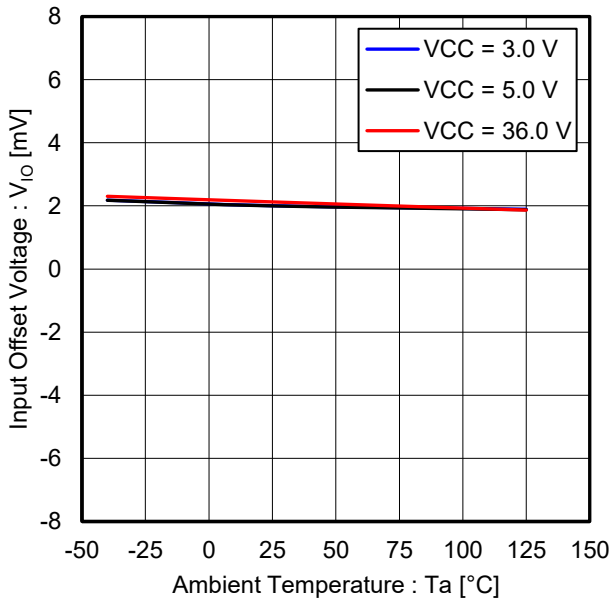

Figure 8. Input Offset Voltage vs Ambient Temperature

(Note) The above data are measurement value of typical sample; it is not guaranteed.

© 2024 ROHM Co., Ltd. All rights reserved.

Typical Performance Curves - continued

V_{EE} = 0 V

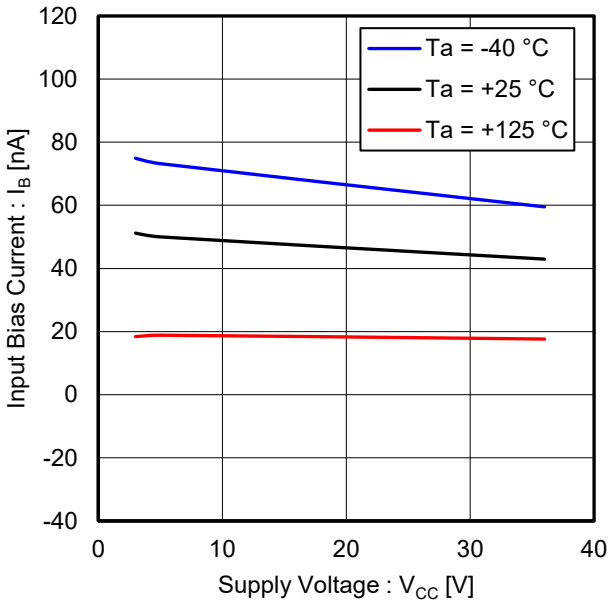

Figure 9. Input Bias Current vs Supply Voltage

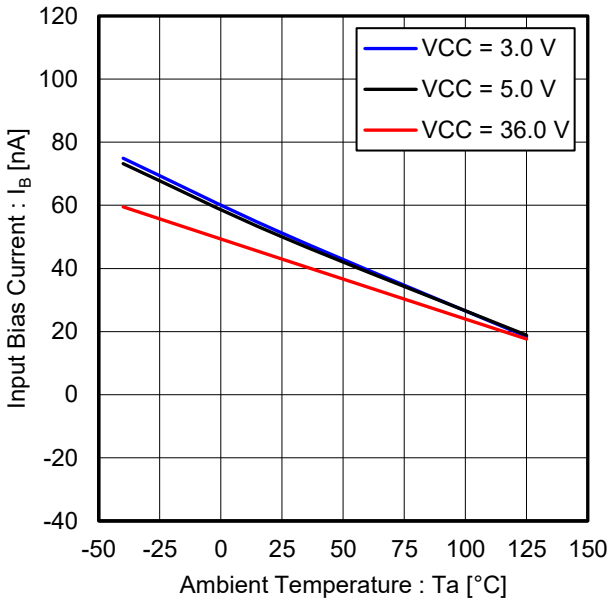

Figure 10. Input Bias Current vs Ambient Temperature

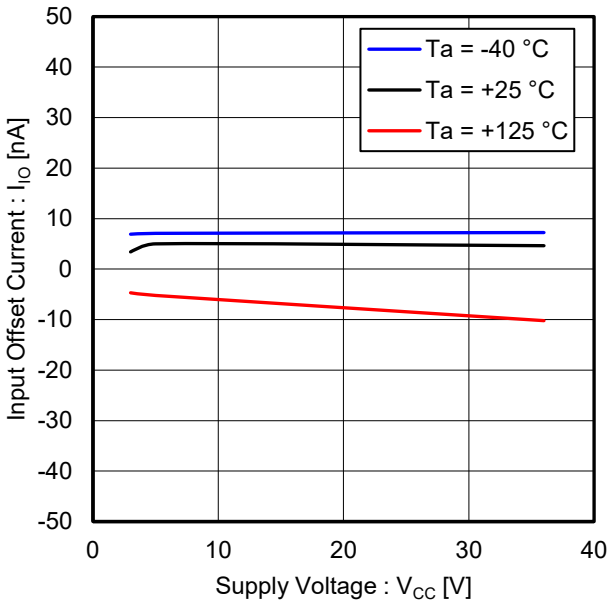

Figure 11. Input Offset Current vs Supply Voltage

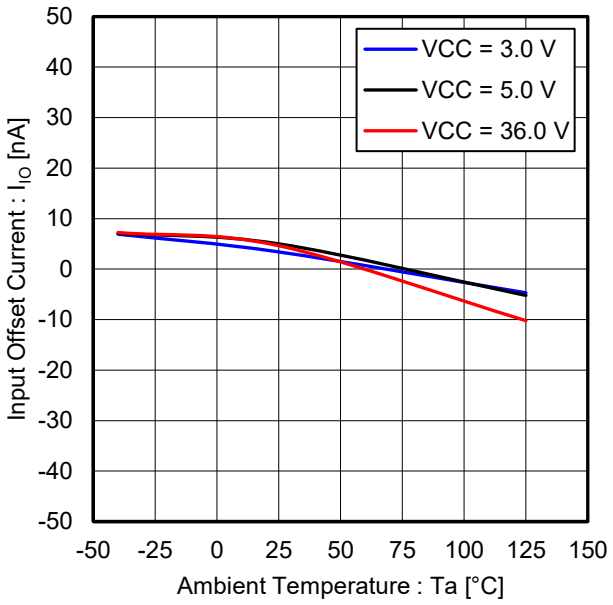

Figure 12. Input Offset Current vs Ambient Temperature

(Note) The above data are measurement value of typical sample; it is not guaranteed.

© 2024 ROHM Co., Ltd. All rights reserved.

Typical Performance Curves - continued

V_{EE} = 0 V

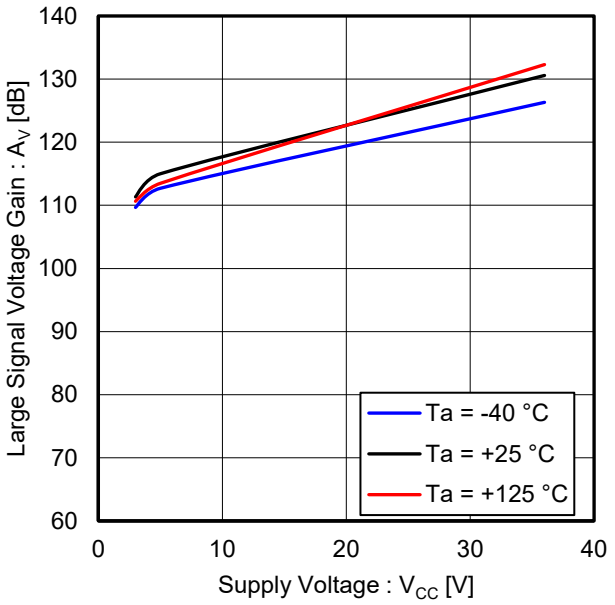

Figure 13. Large Signal Voltage Gain vs Supply Voltage

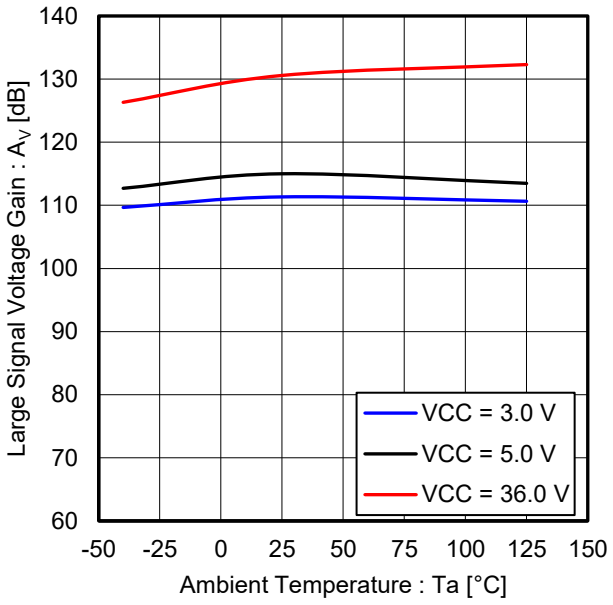

Figure 14. Large Signal Voltage Gain vs Ambient Temperature

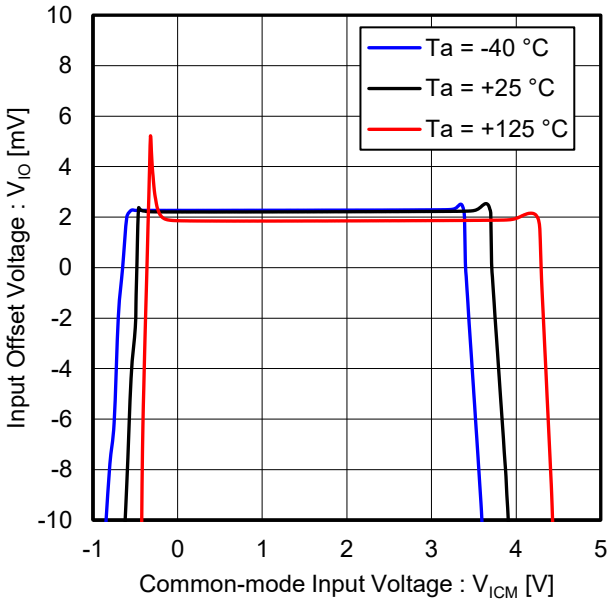

Figure 15. Input Offset Voltage vs Common-mode Input Voltage
(V_{CC} = 5 V)

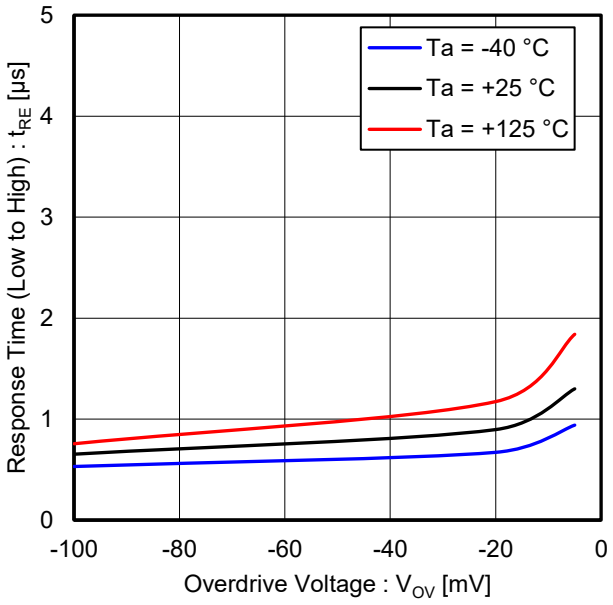

Figure 16. Response Time (Low to High) vs Overdrive Voltage
(V_{CC} = 5 V, V_{RL} = 5 V, R_L = 5.1 kΩ)

(Note) The above data are measurement value of typical sample; it is not guaranteed.

© 2024 ROHM Co., Ltd. All rights reserved.

Typical Performance Curves - continued

V_{EE} = 0 V

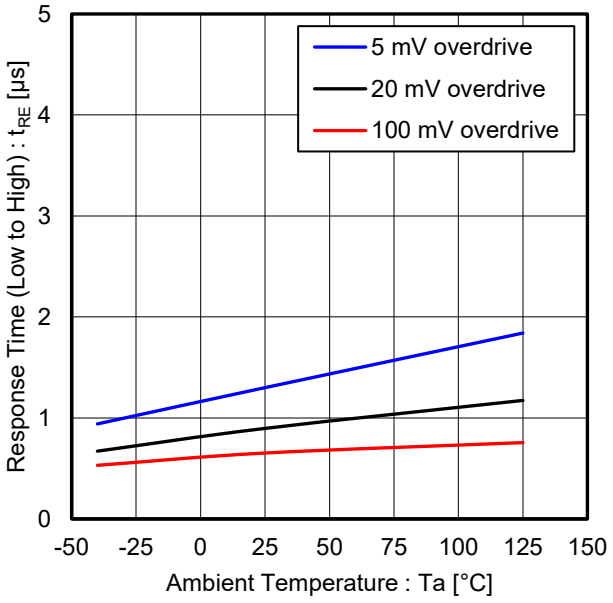

Figure 17. Response Time (Low to High) vs Ambient Temperature
(V_{CC} = 5 V, V_{RL} = 5 V, R_L = 5.1 kΩ)

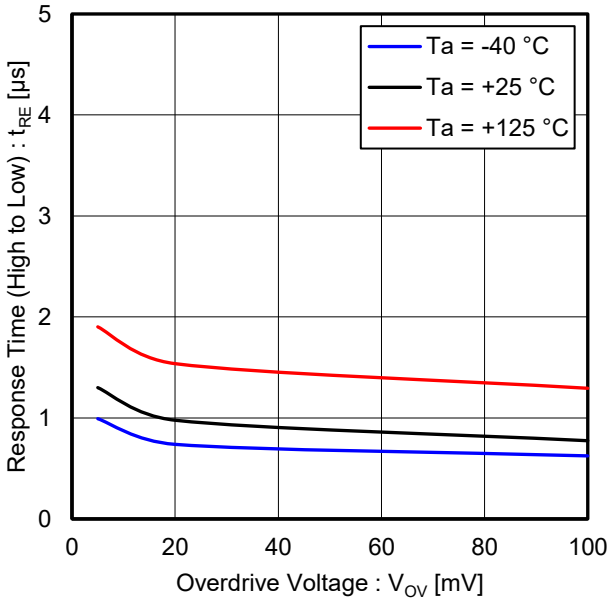

Figure 18. Response Time (High to Low) vs Overdrive Voltage
(V_{CC} = 5 V, V_{RL} = 5 V, R_L = 5.1 kΩ)

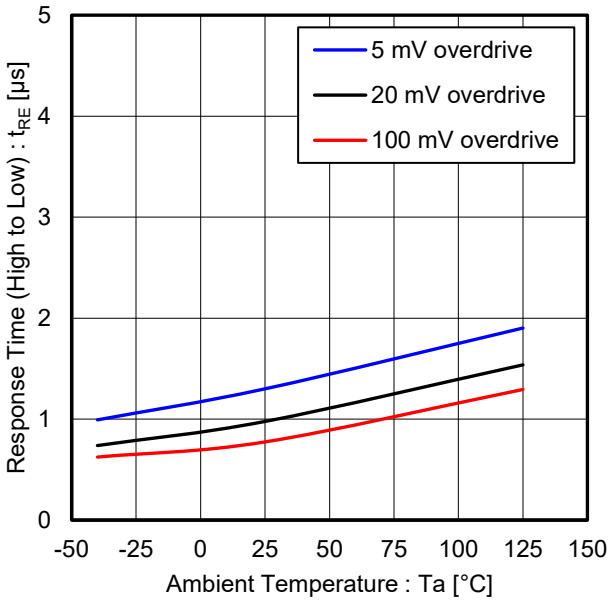

Figure 19. Response Time (High to Low) vs Ambient Temperature
(V_{CC} = 5 V, V_{RL} = 5 V, R_L = 5.1 kΩ)

(Note) The above data are measurement value of typical sample; it is not guaranteed.

© 2024 ROHM Co., Ltd. All rights reserved.

Application Information

1. Unused Circuits
   When there are unused circuits, it is recommended that they are connected as in right figure, and set the non-inverting input pin to electric potential within the common-mode input voltage range (V_{ICMR}).

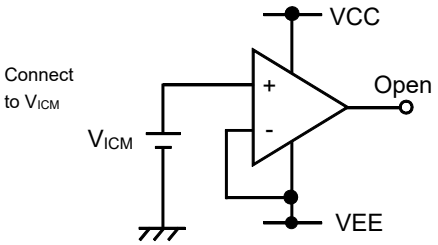

Figure 20. Example of application unused circuit processing

2. Input Voltage
   Applying V_{EE} + 36 V to the input pin is possible without causing deterioration of the electrical characteristics or destruction, regardless of the supply voltage. However, this does not ensure circuit operation. Note that the circuit operates normally only when the input voltage is within the common-mode input voltage range of the electric characteristics.

3. Power Supply (single/dual)
   The comparator operates when the voltage is supplied between the VCC and VEE pin. Therefore, the comparator can operate from single supply or dual supplies.

4. Pin Short-circuits
   When the output and the VCC pins are shorted, excessive output current may flow, resulting in undue heat generation and, subsequently, destruction.

5. Handling the IC
   Applying mechanical stress to the IC by deflecting or bending the board may cause fluctuations of the electrical characteristics due to the piezo resistance effects. Pay attention to defecting or bending the board.

© 2024 ROHM Co., Ltd. All rights reserved.

Application Examples

○Reference voltage is -IN

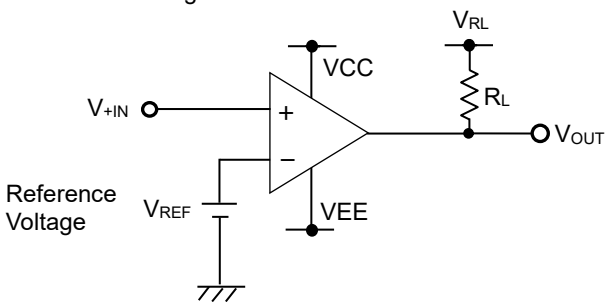

Figure 21. Circuit example when reference voltage is -IN

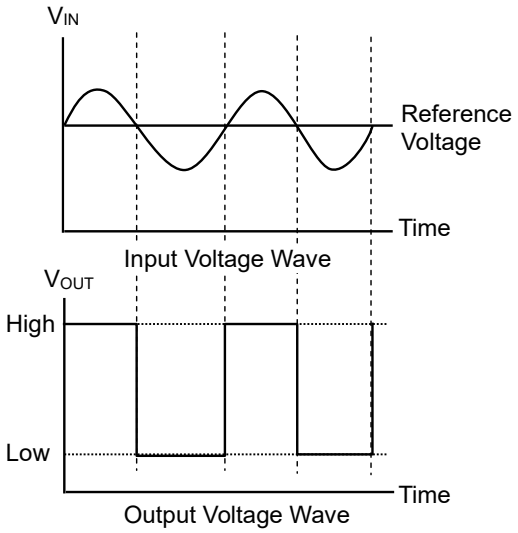

While the input voltage (V_{IN}) is higher than the reference voltage, the output voltage remains high. In case the input voltage becomes lower than the reference voltage, the output voltage will turn low.

○Reference voltage is +IN

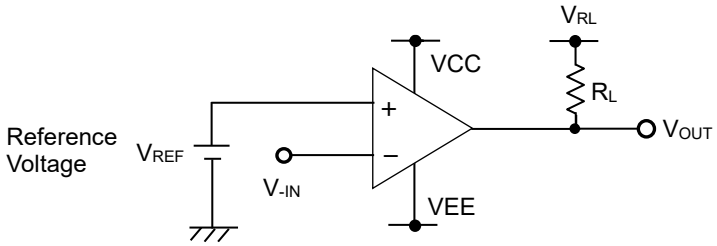

Figure 22. Circuit example when reference voltage is +IN

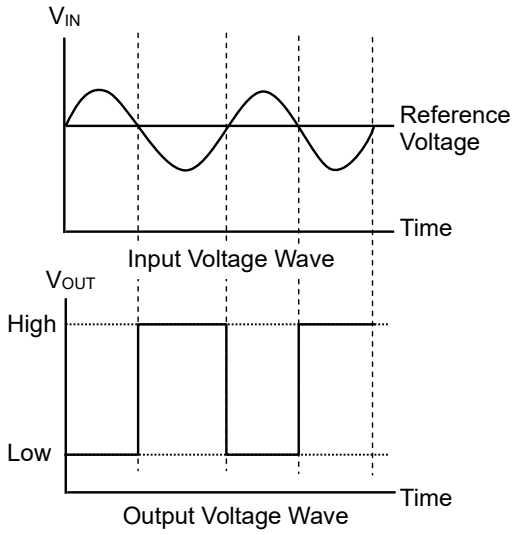

While the input voltage (V_{IN}) is lower than the reference voltage, the output voltage remains high. In case the input voltage becomes higher than the reference voltage, the output voltage will turn low.

© 2024 ROHM Co., Ltd. All rights reserved.

I/O Equivalence Circuits

Pin No.	Pin Name	Pin Description	Equivalence Circuit
1 2 13 14	OUT2 OUT1 OUT4 OUT3	Output	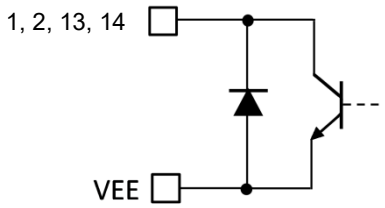
4 5 6 7 8 9 10 11	-IN1 +IN1 -IN2 +IN2 -IN3 +IN3 -IN4 +IN4	Input	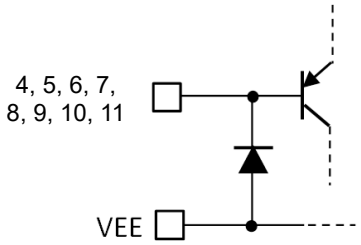

© 2024 ROHM Co., Ltd. All rights reserved.

Operational Notes

1. **Reverse Connection of Power Supply**
   Connecting the power supply in reverse polarity can damage the IC. Take precautions against reverse polarity when connecting the power supply, such as mounting an external diode between the power supply and the IC's power supply pins.

2. **Power Supply Lines**
   Design the PCB layout pattern to provide low impedance supply lines. Furthermore, connect a capacitor to ground at all power supply pins. Consider the effect of temperature and aging on the capacitance value when using electrolytic capacitors.

3. **Ground Voltage**
   Ensure that no pins are at a voltage below that of the ground pin at any time, even during transient condition.

4. **Ground Wiring Pattern**
   When using both small-signal and large-current ground traces, the two ground traces should be routed separately but connected to a single ground at the reference point of the application board to avoid fluctuations in the small-signal ground caused by large currents. Also ensure that the ground traces of external components do not cause variations on the ground voltage. The ground lines must be as short and thick as possible to reduce line impedance.

5. **Recommended Operating Conditions**
   The function and operation of the IC are guaranteed within the range specified by the recommended operating conditions. The characteristic values are guaranteed only under the conditions of each item specified by the electrical characteristics.

6. **Inrush Current**
   When power is first supplied to the IC, it is possible that the internal logic may be unstable and inrush current may flow instantaneously due to the internal powering sequence and delays, especially if the IC has more than one power supply. Therefore, give special consideration to power coupling capacitance, power wiring, width of ground wiring, and routing of connections.

7. **Testing on Application Boards**
   When testing the IC on an application board, connecting a capacitor directly to a low-impedance output pin may subject the IC to stress. Always discharge capacitors completely after each process or step. The IC's power supply should always be turned off completely before connecting or removing it from the test setup during the inspection process. To prevent damage from static discharge, ground the IC during assembly and use similar precautions during transport and storage.

8. **Inter-pin Short and Mounting Errors**
   Ensure that the direction and position are correct when mounting the IC on the PCB. Incorrect mounting may result in damaging the IC. Avoid nearby pins being shorted to each other especially to ground, power supply and output pin. Inter-pin shorts could be due to many reasons such as metal particles, water droplets (in very humid environment) and unintentional solder bridge deposited in between pins during assembly to name a few.

9. **Unused Input Pins**
   Input pins of an IC are often connected to the gate of a MOS transistor. The gate has extremely high impedance and extremely low capacitance. If left unconnected, the electric field from the outside can easily charge it. The small charge acquired in this way is enough to produce a significant effect on the conduction through the transistor and cause unexpected operation of the IC. So unless otherwise specified, unused input pins should be connected to the power supply or ground line.

© 2024 ROHM Co., Ltd. All rights reserved.

Operational Notes – continued

10. Regarding the Input Pin of the IC

This monolithic IC contains P+ isolation and P substrate layers between adjacent elements in order to keep them isolated. P-N junctions are formed at the intersection of the P layers with the N layers of other elements, creating a parasitic diode or transistor. For example (refer to figure below):

When GND > Pin A and GND > Pin B, the P-N junction operates as a parasitic diode.
When GND > Pin B, the P-N junction operates as a parasitic transistor.

Parasitic diodes inevitably occur in the structure of the IC. The operation of parasitic diodes can result in mutual interference among circuits, operational faults, or physical damage. Therefore, conditions that cause these diodes to operate, such as applying a voltage lower than the GND voltage to an input pin (and thus to the P substrate) should be avoided.

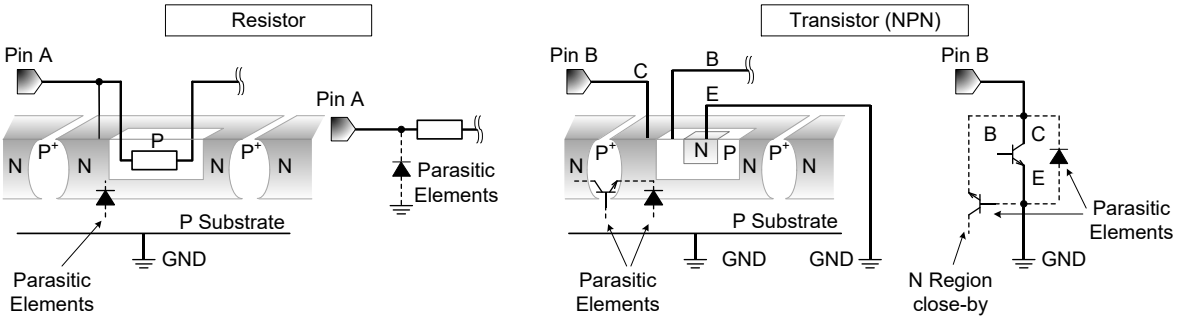

Figure 23. Example of Monolithic IC Structure

11. Ceramic Capacitor

When using a ceramic capacitor, determine a capacitance value considering the change of capacitance with temperature and the decrease in nominal capacitance due to DC bias and others.

© 2024 ROHM Co., Ltd. All rights reserved.

Ordering Information

L	M	2	9	0	1	E	Z	F	V	-	C	E	2

Package
FV: SSOP-B14

Product Rank
C: for Automotive
Packaging and forming specification
E2: Embossed tape and reel

Marking Diagram

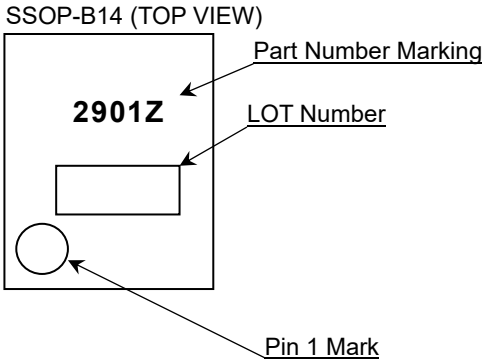

© 2024 ROHM Co., Ltd. All rights reserved.

Physical Dimension and Packing Information

Package Name	SSOP-B14

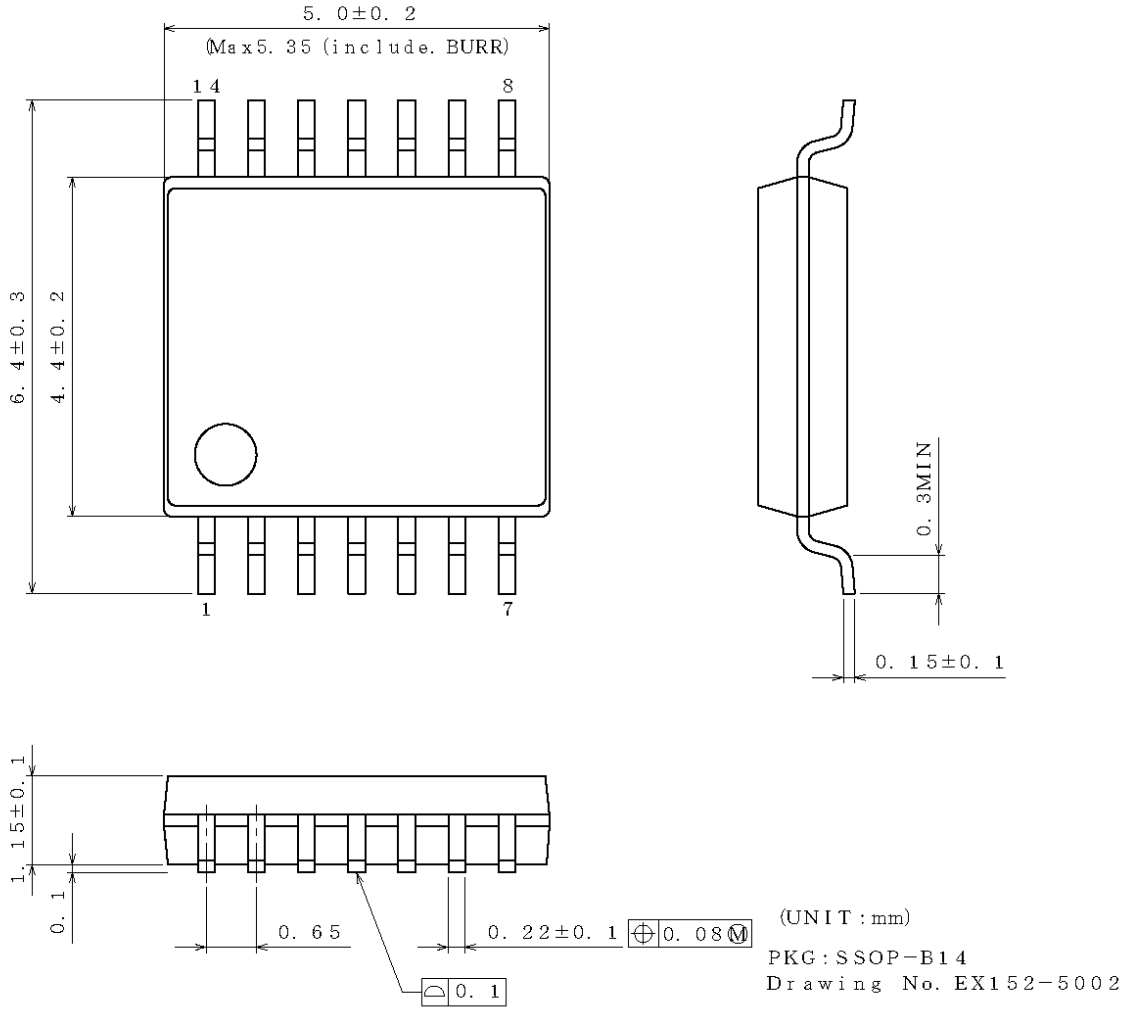

< Tape and Reel Information >

Tape	Embossed carrier tape
Quantity	2500pcs
Direction of feed	E2 The direction is the pin 1 of product is at the upper left when you hold reel on the left hand and you pull out the tape on the right hand

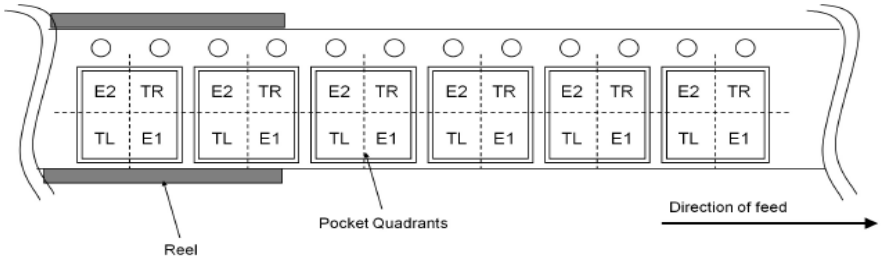

© 2024 ROHM Co., Ltd. All rights reserved.

Revision History

Date	Revision	Changes
18.Nov.2024	001	New Release

© 2024 ROHM Co., Ltd. All rights reserved.

Notice

Precaution on using ROHM Products

1. If you intend to use our Products in devices requiring extremely high reliability (such as medical equipment (Note 1), aircraft/spacecraft, nuclear power controllers, etc.) and whose malfunction or failure may cause loss of human life, bodily injury or serious damage to property ("Specific Applications"), please consult with the ROHM sales representative in advance. Unless otherwise agreed in writing by ROHM in advance, ROHM shall not be in any way responsible or liable for any damages, expenses or losses incurred by you or third parties arising from the use of any ROHM's Products for Specific Applications.

(Note1) Medical Equipment Classification of the Specific Applications

JAPAN	USA	EU	CHINA
CLASSⅢ	CLASSⅢ	CLASSⅡb	CLASSⅢ
CLASSⅣ		CLASSⅢ	

2. ROHM designs and manufactures its Products subject to strict quality control system. However, semiconductor products can fail or malfunction at a certain rate. Please be sure to implement, at your own responsibilities, adequate safety measures including but not limited to fail-safe design against the physical injury, damage to any property, which a failure or malfunction of our Products may cause. The following are examples of safety measures:
   [a] Installation of protection circuits or other protective devices to improve system safety
   [b] Installation of redundant circuits to reduce the impact of single or multiple circuit failure

3. Our Products are not designed under any special or extraordinary environments or conditions, as exemplified below. Accordingly, ROHM shall not be in any way responsible or liable for any damages, expenses or losses arising from the use of any ROHM's Products under any special or extraordinary environments or conditions. If you intend to use our Products under any special or extraordinary environments or conditions (as exemplified below), your independent verification and confirmation of product performance, reliability, etc, prior to use, must be necessary:
   [a] Use of our Products in any types of liquid, including water, oils, chemicals, and organic solvents
   [b] Use of our Products outdoors or in places where the Products are exposed to direct sunlight or dust
   [c] Use of our Products in places where the Products are exposed to sea wind or corrosive gases, including Cl_2, H_2S, NH_3, SO_2, and NO_2
   [d] Use of our Products in places where the Products are exposed to static electricity or electromagnetic waves
   [e] Use of our Products in proximity to heat-producing components, plastic cords, or other flammable items
   [f] Sealing or coating our Products with resin or other coating materials
   [g] Use of our Products without cleaning residue of flux (Exclude cases where no-clean type fluxes is used. However, recommend sufficiently about the residue.); or Washing our Products by using water or water-soluble cleaning agents for cleaning residue after soldering
   [h] Use of the Products in places subject to dew condensation

4. The Products are not subject to radiation-proof design.

5. Please verify and confirm characteristics of the final or mounted products in using the Products.

6. In particular, if a transient load (a large amount of load applied in a short period of time, such as pulse, is applied, confirmation of performance characteristics after on-board mounting is strongly recommended. Avoid applying power exceeding normal rated power; exceeding the power rating under steady-state loading condition may negatively affect product performance and reliability.

7. De-rate Power Dissipation depending on ambient temperature. When used in sealed area, confirm that it is the use in the range that does not exceed the maximum junction temperature.

8. Confirm that operation temperature is within the specified range described in the product specification.

9. ROHM shall not be in any way responsible or liable for failure induced under deviant condition from what is defined in this document.

Precaution for Mounting / Circuit board design

1. When a highly active halogenous (chlorine, bromine, etc.) flux is used, the residue of flux may negatively affect product performance and reliability.

2. In principle, the reflow soldering method must be used on a surface-mount products, the flow soldering method must be used on a through hole mount products. If the flow soldering method is preferred on a surface-mount products, please consult with the ROHM representative in advance.

For details, please refer to ROHM Mounting specification

© 2015 ROHM Co., Ltd. All rights reserved.

Precautions Regarding Application Examples and External Circuits

1. If change is made to the constant of an external circuit, please allow a sufficient margin considering variations of the characteristics of the Products and external components, including transient characteristics, as well as static characteristics.

2. You agree that application notes, reference designs, and associated data and information contained in this document are presented only as guidance for Products use. Therefore, in case you use such information, you are solely responsible for it and you must exercise your own independent verification and judgment in the use of such information contained in this document. ROHM shall not be in any way responsible or liable for any damages, expenses or losses incurred by you or third parties arising from the use of such information.

Precaution for Electrostatic

This Product is electrostatic sensitive product, which may be damaged due to electrostatic discharge. Please take proper caution in your manufacturing process and storage so that voltage exceeding the Products maximum rating will not be applied to Products. Please take special care under dry condition (e.g. Grounding of human body / equipment / solder iron, isolation from charged objects, setting of Ionizer, friction prevention and temperature / humidity control).

Precaution for Storage / Transportation

1. Product performance and soldered connections may deteriorate if the Products are stored in the places where:
   [a] the Products are exposed to sea winds or corrosive gases, including Cl_2, H_2S, NH_3, SO_2, and NO_2
   [b] the temperature or humidity exceeds those recommended by ROHM
   [c] the Products are exposed to direct sunshine or condensation
   [d] the Products are exposed to high Electrostatic

2. Even under ROHM recommended storage condition, solderability of products out of recommended storage time period may be degraded. It is strongly recommended to confirm solderability before using Products of which storage time is exceeding the recommended storage time period.

3. Store / transport cartons in the correct direction, which is indicated on a carton with a symbol. Otherwise bent leads may occur due to excessive stress applied when dropping of a carton.

4. Use Products within the specified time after opening a humidity barrier bag. Baking is required before using Products of which storage time is exceeding the recommended storage time period.

Precaution for Product Label

A two-dimensional barcode printed on ROHM Products label is for ROHM's internal use only.

Precaution for Disposition

When disposing Products please dispose them properly using an authorized industry waste company.

Precaution for Foreign Exchange and Foreign Trade act

Since concerned goods might be fallen under listed items of export control prescribed by Foreign exchange and Foreign trade act, please consult with ROHM in case of export.

Precaution Regarding Intellectual Property Rights

1. All information and data including but not limited to application example contained in this document is for reference only. ROHM does not warrant that foregoing information or data will not infringe any intellectual property rights or any other rights of any third party regarding such information or data.

2. ROHM shall not have any obligations where the claims, actions or demands arising from the combination of the Products with other articles such as components, circuits, systems or external equipment (including software).

3. No license, expressly or implied, is granted hereby under any intellectual property rights or other rights of ROHM or any third parties with respect to the Products or the information contained in this document. Provided, however, that ROHM will not assert its intellectual property rights or other rights against you or your customers to the extent necessary to manufacture or sell products containing the Products, subject to the terms and conditions herein.

Other Precaution

1. This document may not be reprinted or reproduced, in whole or in part, without prior written consent of ROHM.

2. The Products may not be disassembled, converted, modified, reproduced or otherwise changed without prior written consent of ROHM.

3. In no event shall you use in any way whatsoever the Products and the related technical information contained in the Products or this document for any military purposes, including but not limited to, the development of mass-destruction weapons.

4. The proper names of companies or products described in this document are trademarks or registered trademarks of ROHM, its affiliated companies or third parties.

© 2015 ROHM Co., Ltd. All rights reserved.

General Precaution

1. Before you use our Products, you are requested to carefully read this document and fully understand its contents. ROHM shall not be in any way responsible or liable for failure, malfunction or accident arising from the use of any ROHM's Products against warning, caution or note contained in this document.

2. All information contained in this document is current as of the issuing date and subject to change without any prior notice. Before purchasing or using ROHM's Products, please confirm the latest information with a ROHM sales representative.

3. The information contained in this document is provided on an "as is" basis and ROHM does not warrant that all information contained in this document is accurate and/or error-free. ROHM shall not be in any way responsible or liable for any damages, expenses or losses incurred by you or third parties resulting from inaccuracy or errors of or concerning such information.

© 2015 ROHM Co., Ltd. All rights reserved.