2.7V to 5.5V Input, 2.0A Integrated MOSFET Single Synchronous Buck DC/DC Converter

BD9B200MUV

General Description

BD9B200MUV is a synchronous buck switching regulator with built-in low on-resistance power MOSFETs. This IC, which is capable of providing current up to 2A, features fast transient response by employing constant on-time control system. It offers high oscillating frequency at low inductance. With its original constant on-time control method which operates low consumption at light load, this product is ideal for equipment and devices that demand minimal standby power consumption.

Key Specifications

- Input Voltage Range: 2.7V to 5.5V
- Output Voltage Range: 0.8 V to V_{PVIN} x 0.8 V
- Maximum Operating Current: 2A (Max)
- Switching Frequency: 2MHz/1MHz (Typ)
- High-Side MOSFET ON Resistance: 50mΩ (Typ)
- Low-Side MOSFET ON Resistance: 50mΩ (Typ)
- Standby Current: 0μA (Typ)

Package

	W (Typ) x D (Typ) x H (Max)
VQFN016V3030	3.00 mm x 3.00 mm x 1.00 mm

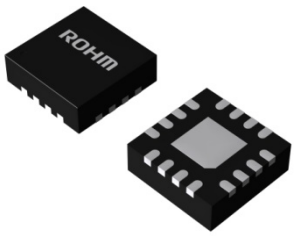

VQFN016V3030

Features

- Synchronous Single DC/DC Converter
- Constant on-time control suitable to Deep-SLLM
- Over Current Protection
- Short Circuit Protection
- Thermal Shutdown Protection
- Under Voltage Lockout Protection
- Adjustable Soft Start
- Power Good Output
- VQFN016V3030 Package (Backside Heat Dissipation)

Applications

- Step-down Power Supply for DSPs, FPGAs, Microprocessors, etc.
- Laptop PCs/Tablet PCs/Servers
- LCD TVs
- Storage Devices (HDDs/SSDs)
- Printers, OA Equipment
- Entertainment Devices
- Distributed Power Supply, Secondary Power Supply

Typical Application Circuit

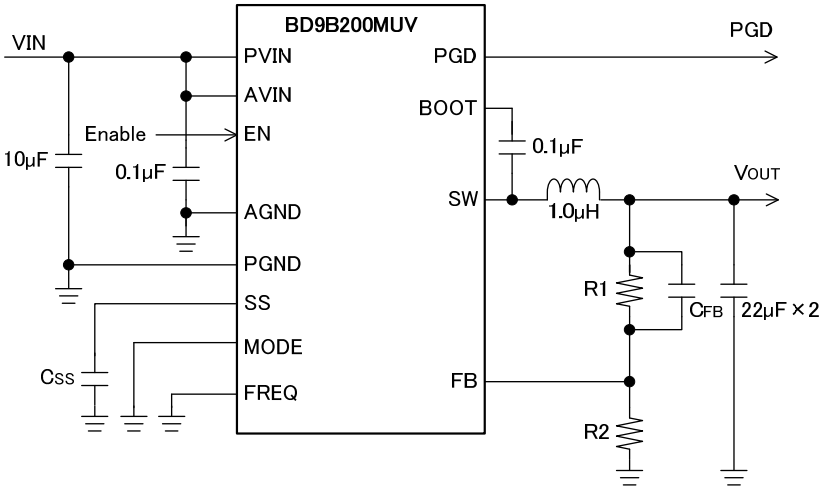

Figure 1. Application Circuit

○Product structure : Silicon monolithic integrated circuit ○This product has no designed protection against radioactive rays

© 2015 ROHM Co., Ltd. All rights reserved.

Pin Configuration

(TOP VIEW)

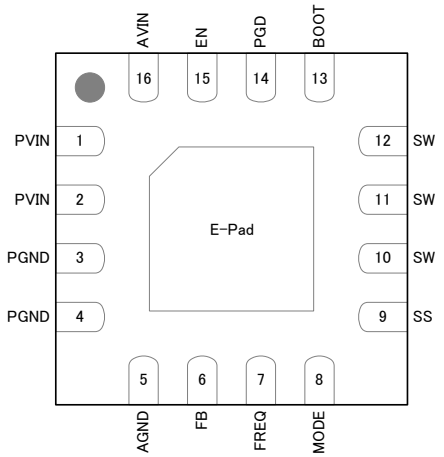

Figure 2. Pin Assignment

Pin Descriptions

Pin No.	Pin Name	Function
1, 2	PVIN	Power supply terminals for the switching regulator. These terminals supply power to the output stage of the switching regulator. Connecting a 10µF ceramic capacitor is recommended.
3, 4	PGND	Ground terminals for the output stage of the switching regulator.
5	AGND	Ground terminal for the control circuit.
6	FB	An inverting input node for the error amplifier and main comparator. See page 22 for how to calculate the resistance of the output voltage setting.
7	FREQ	Terminal for setting switching frequency. Connecting this terminal to ground makes switching to operate constant on-time corresponding to 2.0MHz. Connecting this terminal to AVIN makes switching to operate constant on-time corresponding to 1.0MHz. Please fix this terminal to AVIN or ground in operation.
8	MODE	Terminal for setting switching control mode. Connecting this terminal to AVIN forces the device to operate in the fixed frequency PWM mode. Connecting this terminal to ground enables the Deep-SLLM control and the mode is automatically switched between the Deep-SLLM control and fixed frequency PWM mode. Please fix this terminal to AVIN or ground in operation.
9	SS	Terminal for setting the soft start time. The rise time of the output voltage can be specified by connecting a capacitor to this terminal. See page 23 for how to calculate the capacitance.
10, 11, 12	SW	Switch nodes. These terminals are connected to the source of the High-Side MOSFET and drain of the Low-Side MOSFET. Connect a bootstrap capacitor of 0.1 µF between these terminals and BOOT terminal. In addition, connect an inductor of 0.47µH to 1µH (FREQ=L), 1µH to 1.5µH (FREQ=H) considering the direct current superimposition characteristic.
13	BOOT	Terminal for bootstrap. Connect a bootstrap capacitor of 0.1 µF between this terminal and SW terminals. The voltage of this terminal is the gate drive voltage of the High-Side MOSFET.
14	PGD	A “Power Good” terminal, an open drain output. Use of pull up resistor is needed. See page 17 for how to specify the resistance. When the FB terminal voltage reaches more than 80% of 0.8 V, the internal Nch MOSFET turns off and the output turns High.
15	EN	Enable terminal. Turning this terminal signal Low (0.8V or lower) forces the device to enter the shutdown mode. Turning this terminal signal High (2.0V or higher) enables the device. This terminal must be terminated.
16	AVIN	Terminal for supplying power to the control circuit of the switching regulator. Connecting a 0.1µF ceramic capacitor is recommended. This terminal must be connected to PVIN.
-	E-Pad	A backside heat dissipation exposed pad. Connecting to the internal PCB ground plane by using multiple vias provides excellent heat dissipation characteristics.

© 2015 ROHM Co., Ltd. All rights reserved.

Block Diagram

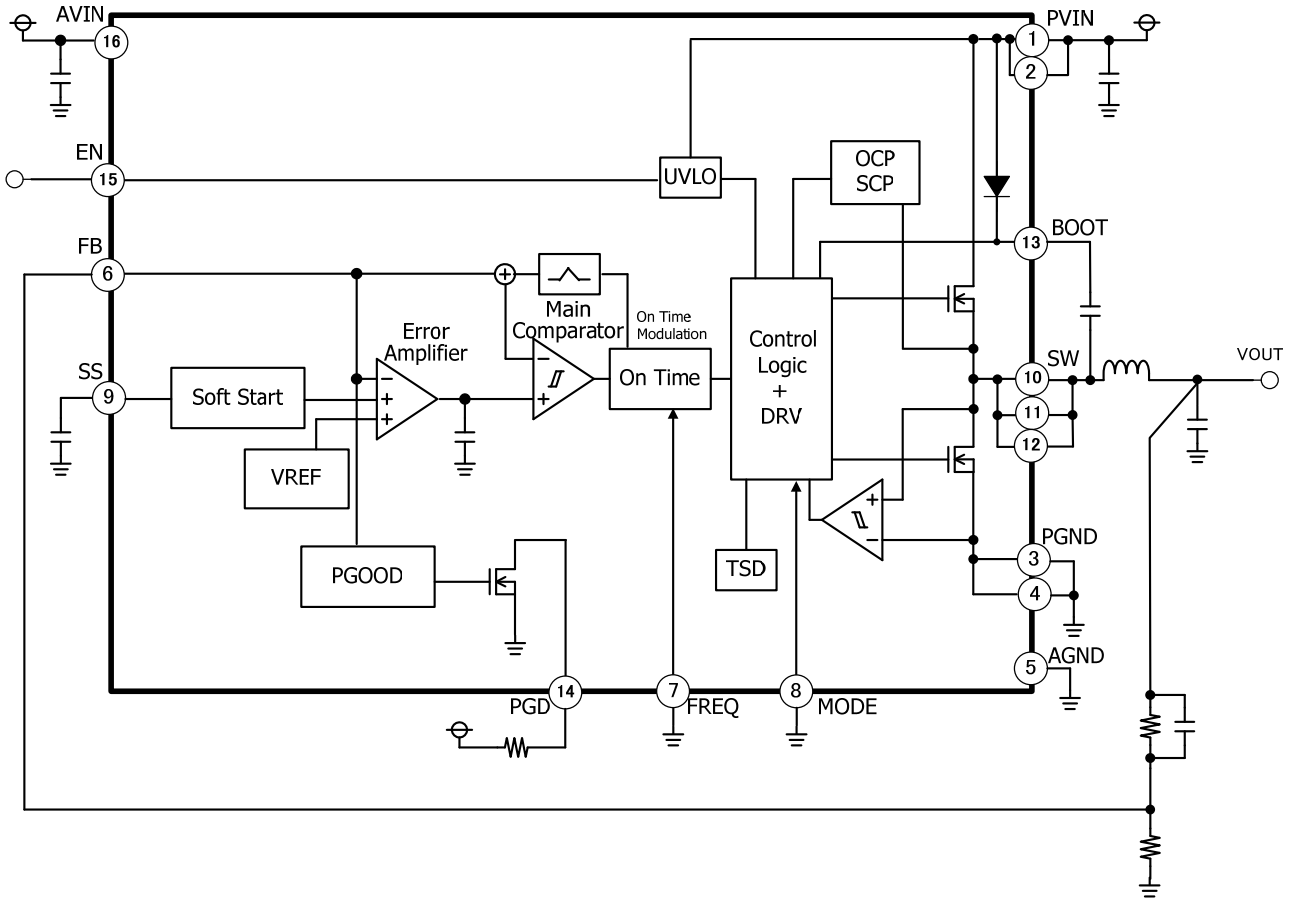

Figure 3. Block Diagram

© 2015 ROHM Co., Ltd. All rights reserved.

Description of Blocks

- VREF
  The VREF block generates the internal reference voltage.

- UVLO
  The UVLO block is for Under Voltage lockout protection. It will shut down the IC when VIN falls to 2.45 V (Typ) or lower. The threshold voltage has a hysteresis of 100mV (Typ).

- TSD
  The TSD block is for thermal protection. The thermal protection circuit shuts down the device when the internal temperature of IC rises to 175°C (Typ) or higher. Thermal protection circuit resets when the temperature falls. The circuit has a hysteresis of 25°C (Typ).

- Soft Start
  The Soft Start circuit slows down the rise of output voltage during start-up and controls the current, which allows the prevention of output voltage overshoot and inrush current. A built-in soft start function is provided and a soft start is initiated in 1msec (Typ) when the SS terminal is open.

- Control Logic + DRV
  This block is a DC/DC driver. A signal from On Time is applied to drive the MOSFETs.

- PGOOD
  When the FB terminal voltage reaches more than 80% of 0.8 V, the Nch MOSFET of the built-in open drain output turns off and the output turns High.

- OCP/SCP
  After soft start is completed and in condition where output voltage is below 70% (Typ) of voltage setting, it counts the number of times of which current flowing in High side FET reaches over current limit. When 512 times is counted it stops operation for 1m sec (Typ) and re-operates. Counting is reset when output voltage is above 80% (Typ) of voltage setting or when EN, UVLO, SCP function is re-operated.

- Error Amplifier
  Adjusts Main Comparator input to make internal reference voltage equal to FB terminal voltage.

- Main Comparator
  Main comparator compares Error Amplifier output and FB terminal voltage. When FB terminal voltage becomes low it outputs High and reports to the On Time block that the output voltage has dropped below control voltage.

- On Time
  This is a block which creates On Time. Requested On Time is created when Main Comparator output becomes High. On Time is adjusted to restrict frequency change even with input and output voltage change.

© 2015 ROHM Co., Ltd. All rights reserved.

Absolute Maximum Ratings (Ta = 25°C)

Parameter	Symbol	Rating	Unit
Supply Voltage	V_{PVIN}, V_{AVIN}	-0.3 to +7	V
EN Terminal Voltage	V_{EN}	-0.3 to +7	V
MODE Terminal Voltage	V_{MODE}	-0.3 to +7	V
FREQ Terminal Voltage	V_{FREQ}	-0.3 to +7	V
PGD Terminal Voltage	V_{PGD}	-0.3 to +7	V
Voltage from GND to BOOT	V_{BOOT}	-0.3 to +14	V
Voltage from SW to BOOT	ΔV_{BOOT}	-0.3 to +7	V
FB Terminal Voltage	V_{FB}	-0.3 to +7	V
SW Terminal Voltage	V_{SW}	-0.3 to V_{PVIN} + 0.3	V
Output Current	I_{OUT}	2.5	A
Allowable Power Dissipation(Note 1)	Pd	2.66	W
Operating Temperature Range	Topr	-40 to 85	°C
Storage Temperature Range	Tstg	-55 to 150	°C

(Note 1) VQFN016V3030: Derate by 21.3mW when operating above 25°C
PCB size: 70mm x 70mm x 1.6mm when mounted on a 4-layer glass epoxy board (copper foil area: 70mm x 70mm)
Copper foil thickness: Front side and reverse side 70µm be used, 2nd and 3rd 35µm be used.

Caution1: Operating the IC over the absolute maximum ratings may damage the IC. The damage can either be a short circuit between pins or an open circuit between pins and the internal circuitry. Therefore, it is important to consider circuit protection measures, such as adding a fuse, in case the IC is operated over the absolute maximum ratings.

Recommended Operating Conditions (Ta= -40°C to +85°C)

Parameter	Symbol	Min	Typ	Max	Unit
Supply Voltage	V_{PVIN}, V_{AVIN}	2.7	-	5.5	V
Output Current (Note 2)	I_{OUT}	-	-	2	A
Output Voltage Range	V_{RANGE}	0.8	-	V_{PVIN} × 0.8	V

(Note 2) Pd, ASO should not be exceeded.

© 2015 ROHM Co., Ltd. All rights reserved.

Electrical Characteristics (Unless otherwise specified Ta=25°C, V_{AVIN} = V_{PVIN} = 5V, V_{EN} = 5V, V_{MODE} = GND)

Parameter	Symbol	Min	Typ	Max	Unit	Conditions
AVIN pin						
Standby Supply Current	I_{STB}	-	0	10	µA	EN=GND
Operating Supply Current	I_{CC}	-	40	60	µA	FREQ=AVIN, I_{OUT}=0mA Non switching
UVLO Detection Threshold	V_{UVLO1}	2.35	2.45	2.55	V	V_{IN} falling
UVLO Release Threshold	V_{UVLO2}	2.425	2.55	2.7	V	V_{IN} rising
UVLO Hysteresis	$V_{UVLOHYS}$	50	100	200	mV	
Enable						
EN Input High Level Voltage	V_{ENH}	2.0	-	-	V	
EN Input Low Level Voltage	V_{ENL}	-	-	0.8	V	
EN Input Current	I_{EN}	-	5	10	µA	EN=5V
Reference Voltage, Error Amplifier						
FB Terminal Voltage	V_{FB1}	0.792	0.8	0.808	V	
FB Input Bias Current	I_{FB}	-	-	1	µA	FB=0.8V
Internal Soft Start Time	T_{SS}	0.5	1.0	2.0	ms	With internal constant
Soft Start Terminal Current	I_{SS}	0.5	1.0	2.0	µA	
Control						
FREQ Input High Level Voltage	V_{FRQH}	V_{AVIN}-0.3	-	-	V	
FREQ Input Low Level Voltage	V_{FRQL}	-	-	0.3	V	
MODE Input High Level Voltage	V_{MODEH}	V_{AVIN}-0.3	-	-	V	
MODE Input Low Level Voltage	V_{MODEL}	-	-	0.3	V	
On time1	ONT1	96	120	144	ns	V_{OUT}=1.2V, FREQ=GND
On time2	ONT2	192	240	288	ns	V_{OUT}=1.2V, FREQ=AVIN
Power Good						
Power Good Rising Threshold	V_{PGDH}	75	80	85	%	FB rising, V_{PGDH}=FB/V_{FB}x100
Power Good Falling Threshold	V_{PGDL}	65	70	75	%	FB falling, V_{PGDL}=FB/V_{FB}x100
Output Leakage Current	I_{LKPGD}	-	0	5	µA	PGD=5V
Power Good On Resistance	R_{PGD}	-	100	200	Ω	
Power Good Low Level Voltage	$PGDV_L$	-	0.1	0.2	V	I_{PGD}=1mA
SW						
High Side FET On Resistance	R_{ONH}	-	50	100	mΩ	BOOT-SW=5V
Low Side FET On Resistance	R_{ONL}	-	50	100	mΩ	
High Side Output Leakage Current	R_{ILH}	-	0	10	µA	No switching
Low Side Output Leakage Current	R_{ILL}	-	0	10	µA	No switching

© 2015 ROHM Co., Ltd. All rights reserved.

Typical Performance Curves

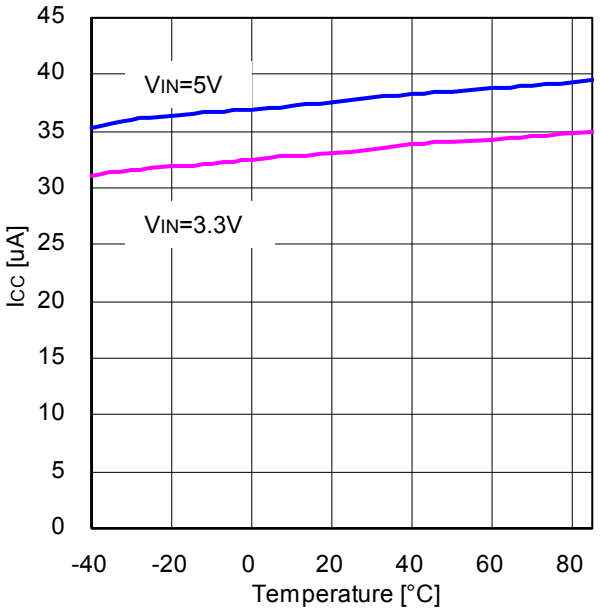

Figure 4. Operating Supply Current vs Temperature

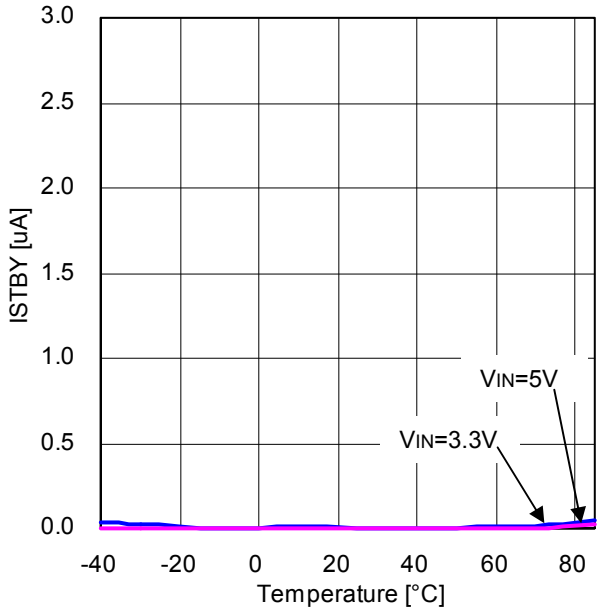

Figure 5. Stand-by Supply Current vs Temperature

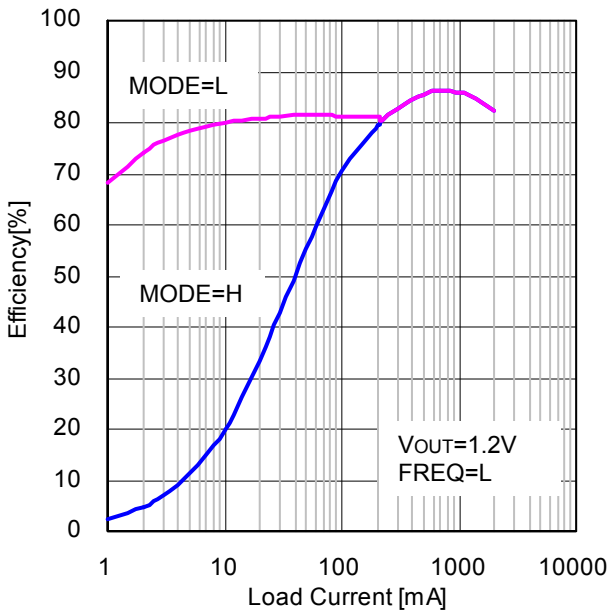

Figure 6. Efficiency vs Load Current
(VIN=5V, VOUT=1.2V, L=1.0μH, FREQ=L)

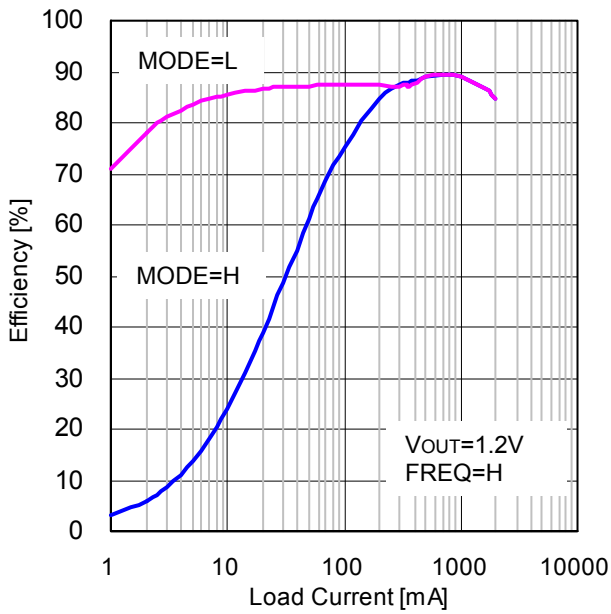

Figure 7. Efficiency vs Load Current
(VIN=5V, VOUT=1.2V, L=1.5μH, FREQ=H)

© 2015 ROHM Co., Ltd. All rights reserved.

Typical Performance Curves - continued

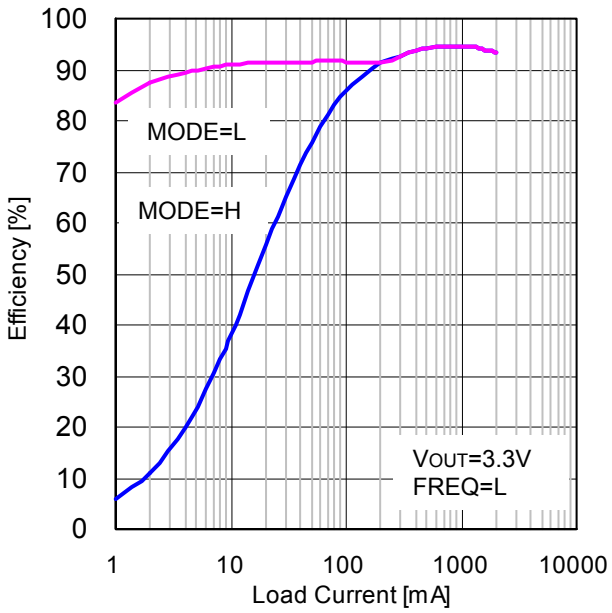

Figure 8. Efficiency vs Load Current
(VIN=5V, VOUT=3.3V, L=1.0μH, FREQ=L)

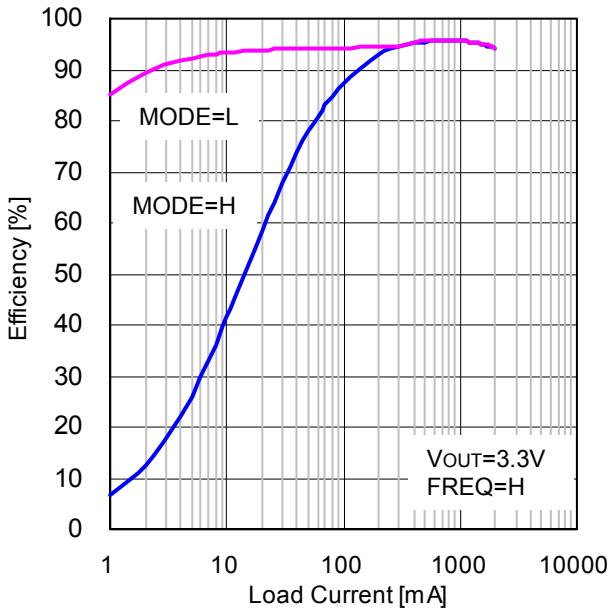

Figure 9. Efficiency vs Load Current
(VIN=5V, VOUT=3.3V, L=1.5μH, FREQ=H)

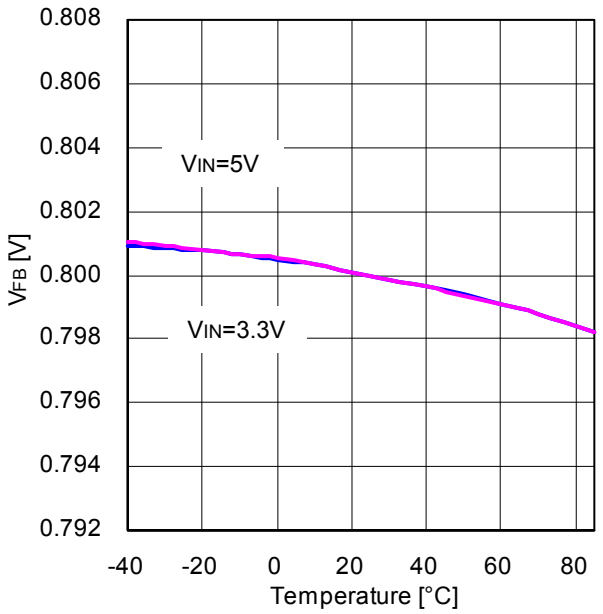

Figure 10. FB Voltage vs Temperature

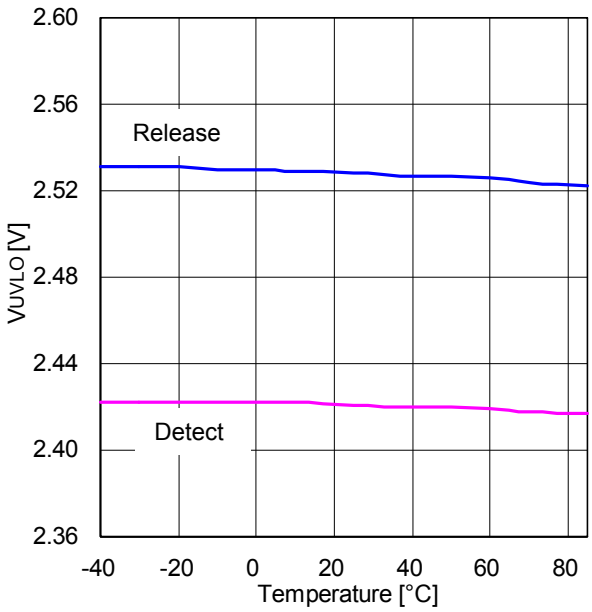

Figure 11. UVLO Threshold vs Temperature

© 2015 ROHM Co., Ltd. All rights reserved.

Typical Performance Curves - continued

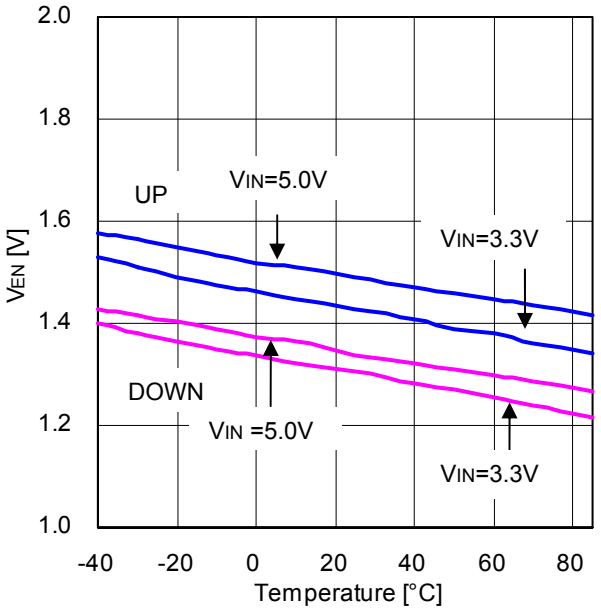

Figure 12. EN Threshold vs Temperature

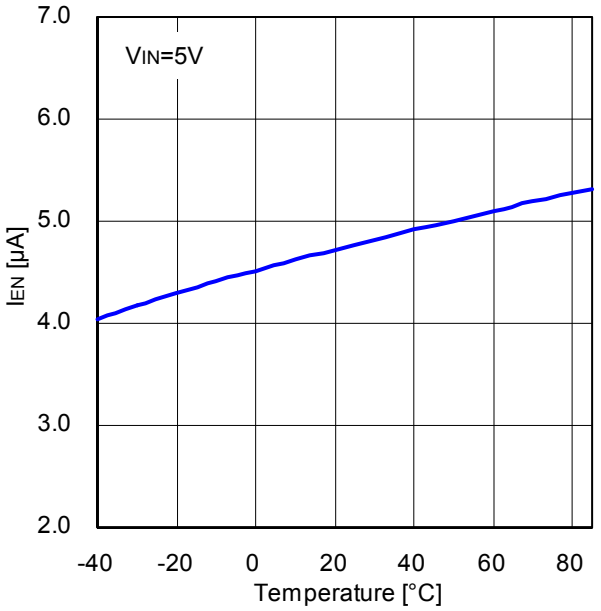

Figure 13. EN Input Current vs Temperature

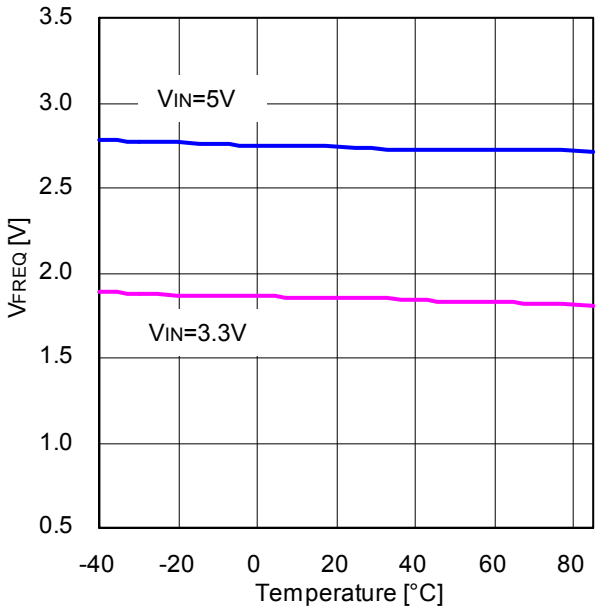

Figure 14. FREQ Threshold vs Temperature

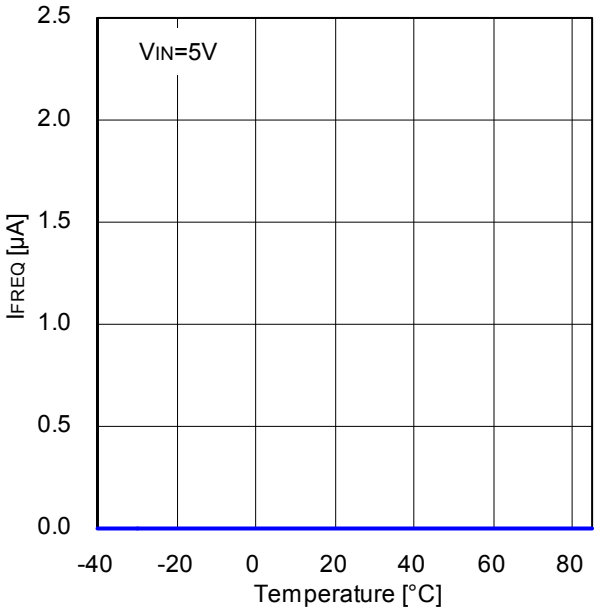

Figure 15. FREQ Input Current vs Temperature

© 2015 ROHM Co., Ltd. All rights reserved.

Typical Performance Curves - continued

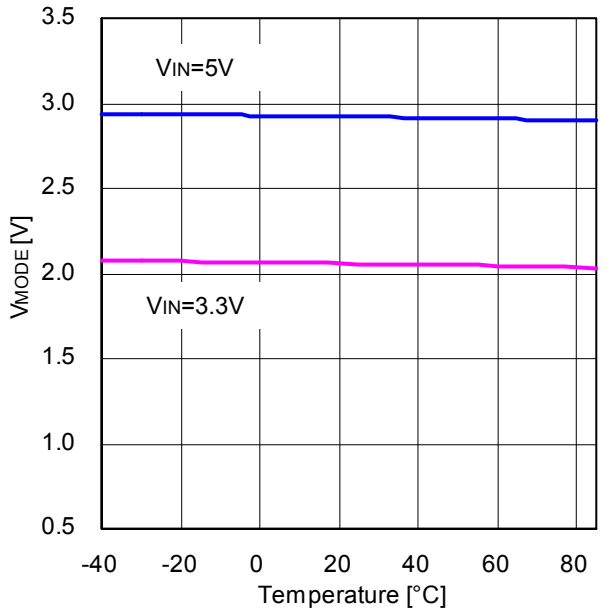

Figure 16. MODE Threshold Voltage vs Temperature

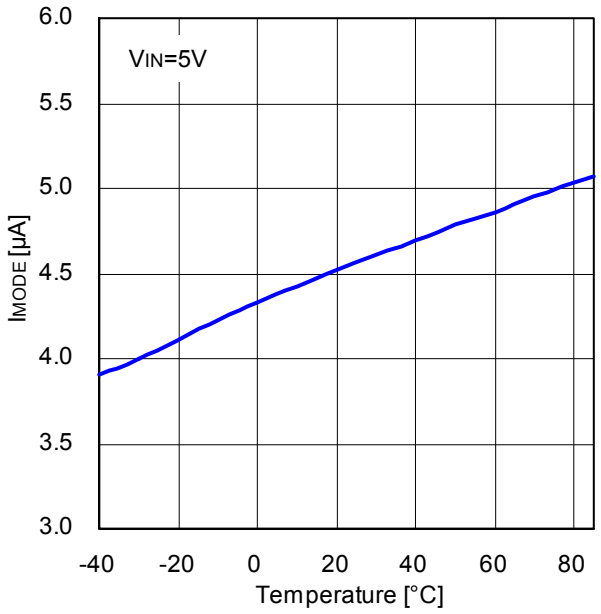

Figure 17. MODE Input Current vs Temperature

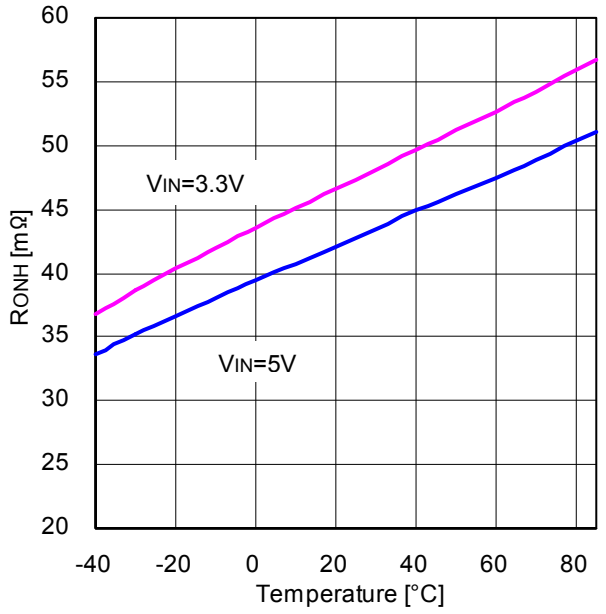

Figure 18. High Side ON-Resistance vs Temperature

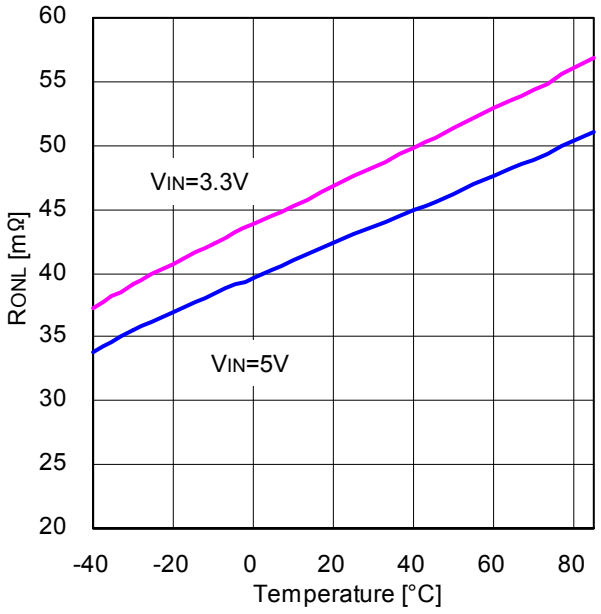

Figure 19. Low Side ON-Resistance vs Temperature

© 2015 ROHM Co., Ltd. All rights reserved.

Typical Performance Curves - continued

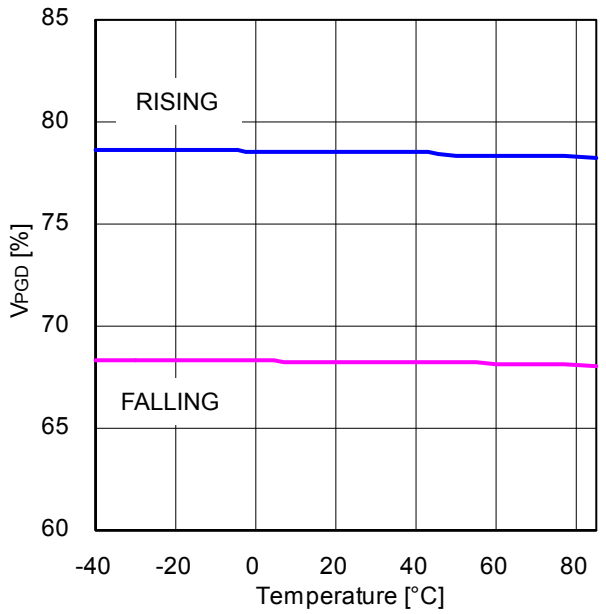

Figure 20. PGD Threshold vs Temperature

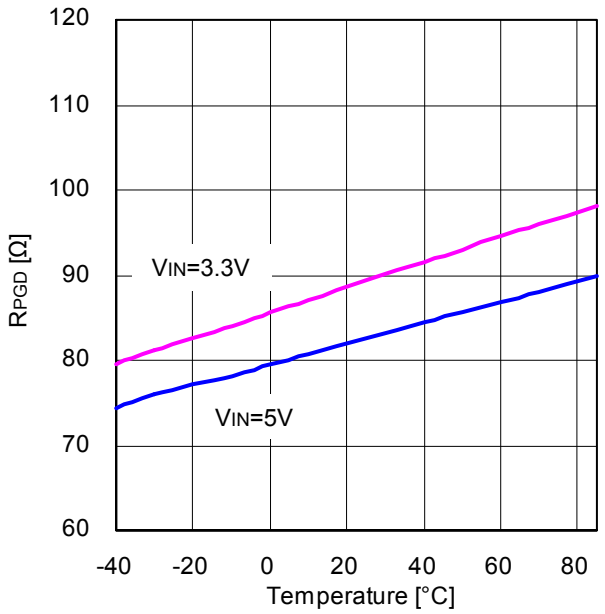

Figure 21. PGD ON ON-Resistance vs Temperature

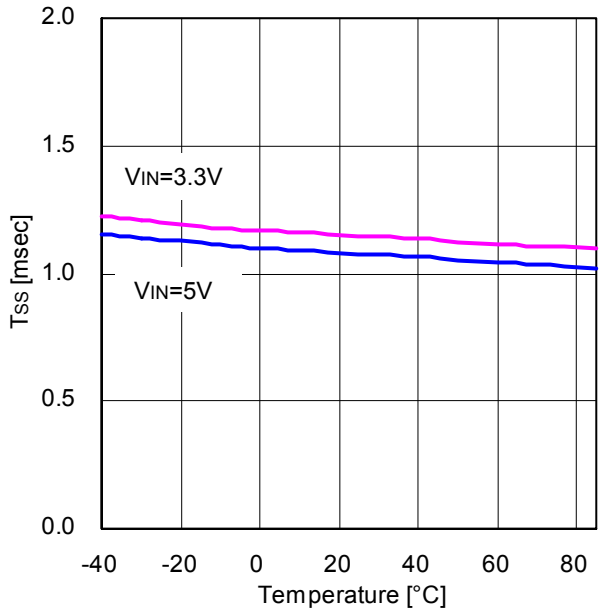

Figure 22. Soft Start Time vs Temperature

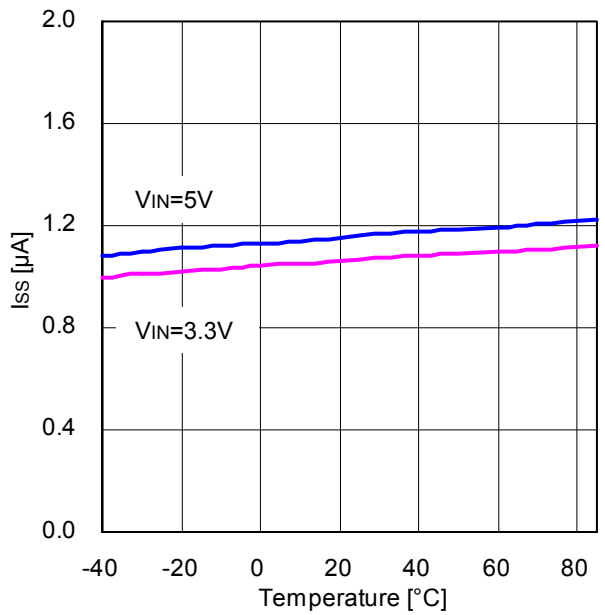

Figure 23. SS Terminal Current vs Temperature

© 2015 ROHM Co., Ltd. All rights reserved.

Typical Performance Curves - continued

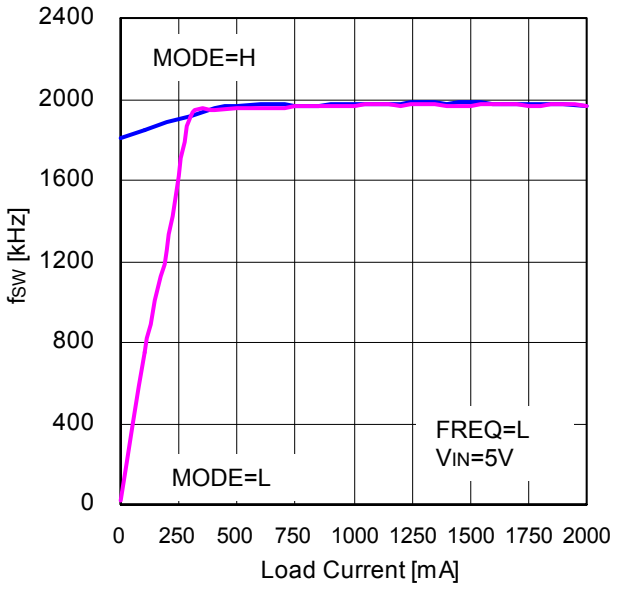

Figure 24. Switching Frequency vs Load Current

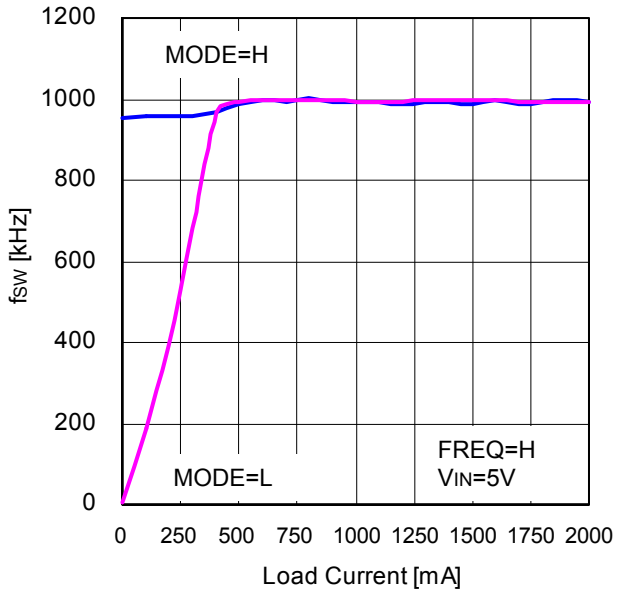

Figure 25. Switching Frequency vs Load Current

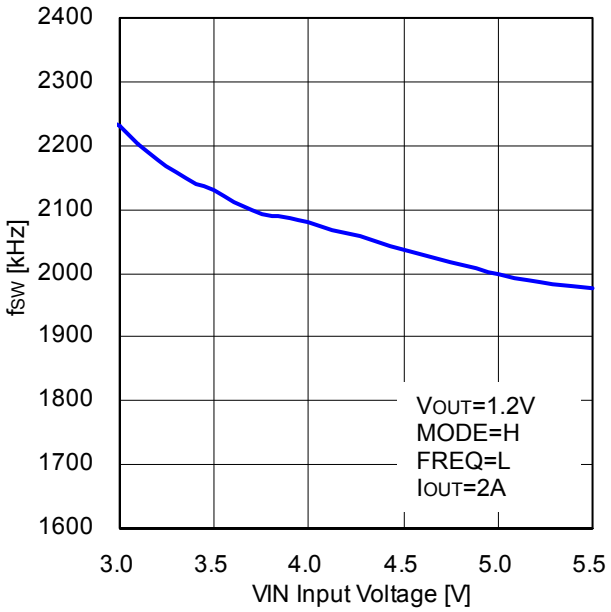

Figure 26. Switching Frequency vs Input Voltage

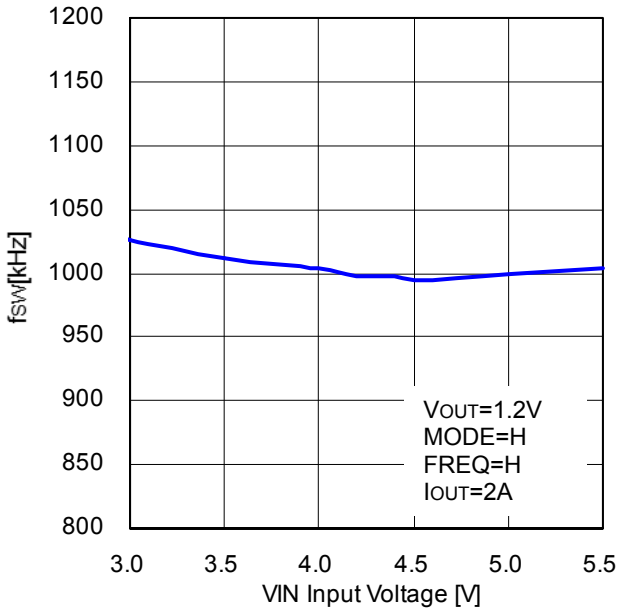

Figure 27. Switching Frequency vs Input Voltage

fSW[kHz]

© 2015 ROHM Co., Ltd. All rights reserved.

Typical Performance Curves - continued

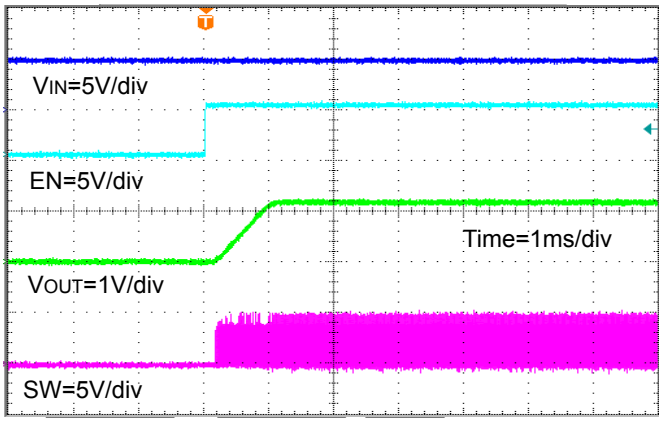

Figure 28. Power Up Waveform with EN
(FREQ=H, RLOAD=0.6Ω)

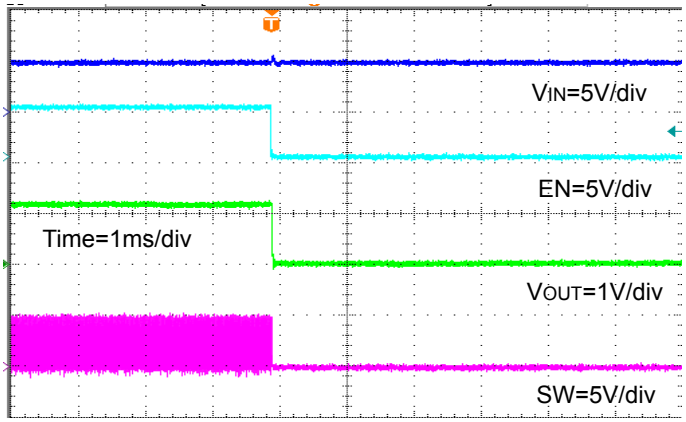

Figure 29. Power Down Waveform with EN
(FREQ=H, RLOAD=0.6Ω)

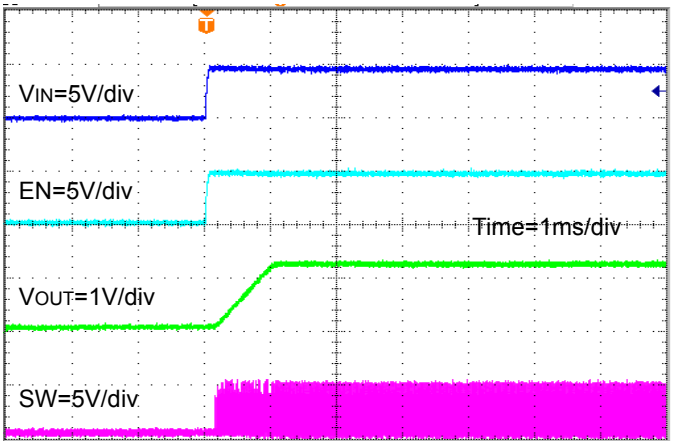

Figure 30. Power Up Waveform with VIN
(FREQ=H, RLOAD=0.6Ω)

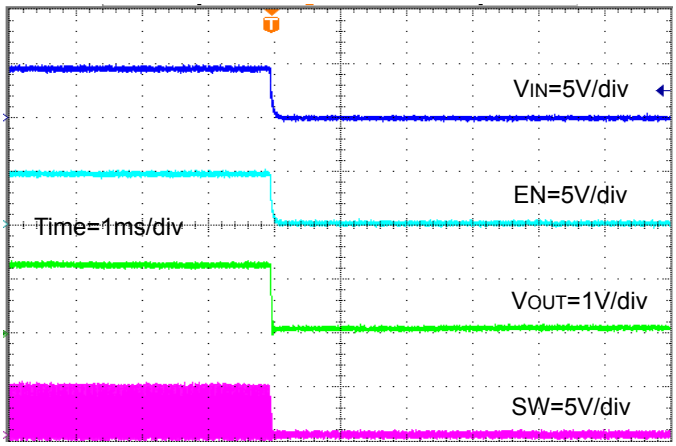

Figure 31. Power Down Waveform with VIN
(FREQ=H, RLOAD=0.6Ω)

© 2015 ROHM Co., Ltd. All rights reserved.

Typical Performance Curves - continued

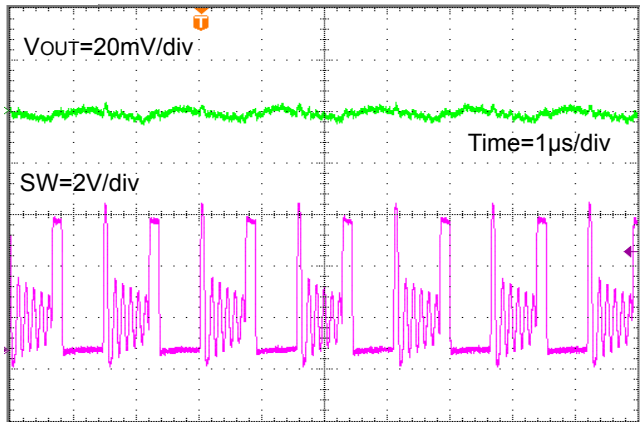

Figure 32. Switching Waveform
(VIN=5V, VOUT=1.2V, FREQ=L, IOUT=0.1A)

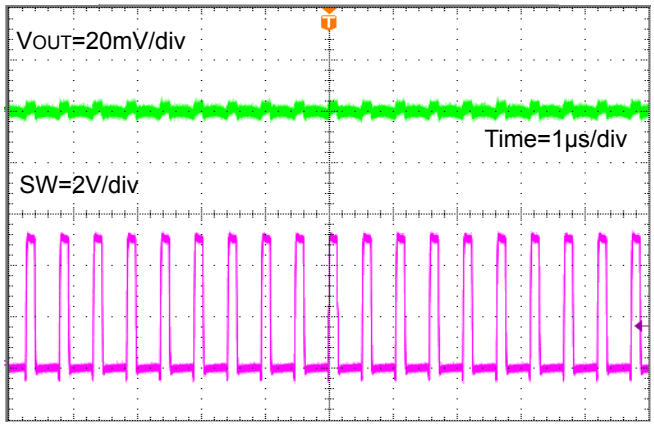

Figure 33. Switching Waveform
(VIN=5V, VOUT=1.2V, FREQ=L, IOUT=2A)

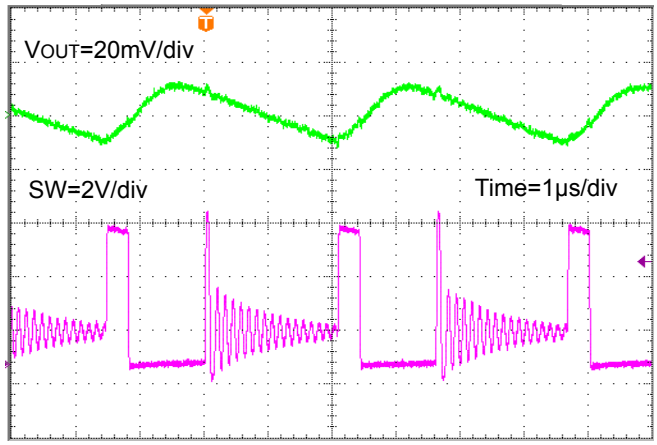

Figure 34. Switching Waveform
(VIN=5V, VOUT=1.2V, FREQ=H, IOUT=0.2A)

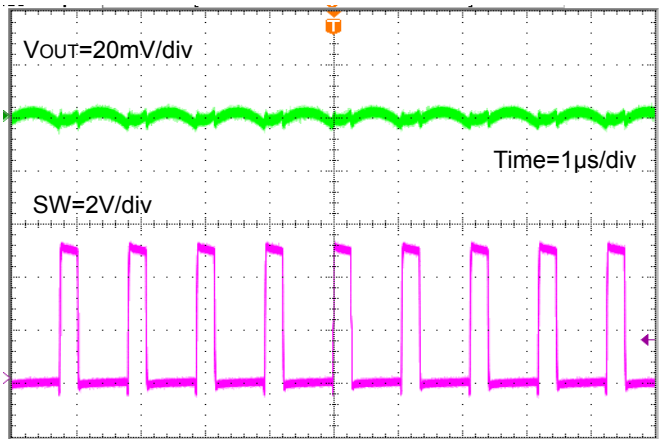

Figure 35. Switching Waveform
(VIN=5V, VOUT=1.2V, FREQ=H, IOUT=2A)

© 2015 ROHM Co., Ltd. All rights reserved.

Typical Performance Curves - continued

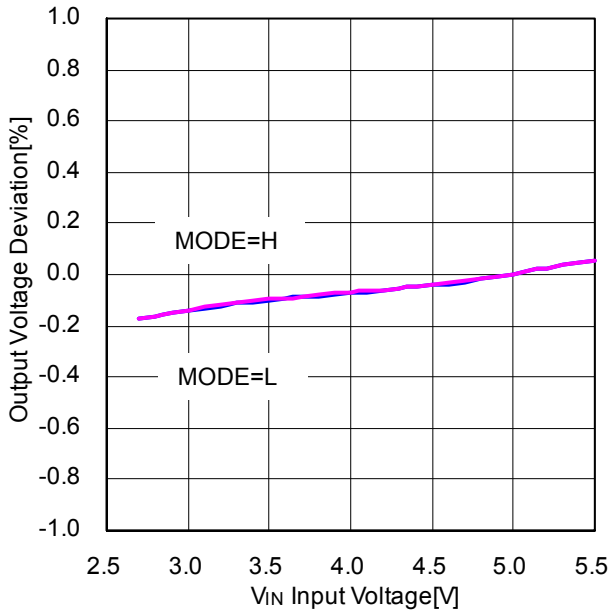

Figure 36. Line Regulation
(VOUT=1.2V, L=1.5μH, FREQ=H, IOUT=2A)

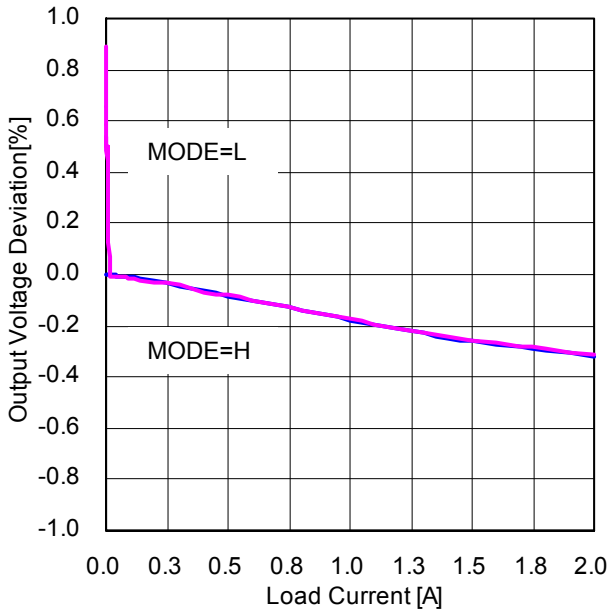

Figure 37. Load Regulation
(VIN=5V, VOUT=1.2V, L=1.5μH, FREQ=H)

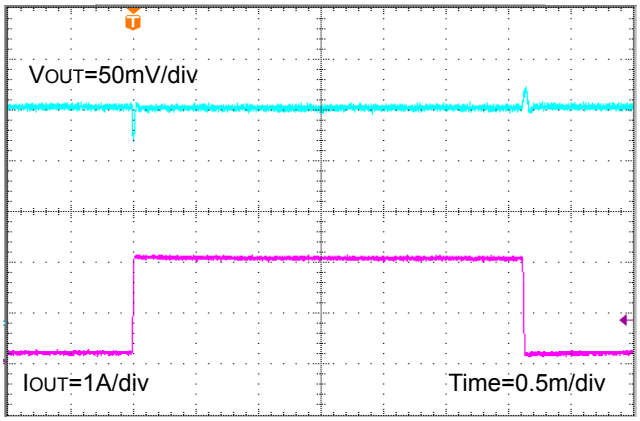

Figure 38. Load Transient Response IOUT=0.1A to 2A
(VIN=5V, VOUT=1.2V, FREQ=L, MODE=L, COUT=Ceramic 44μF)

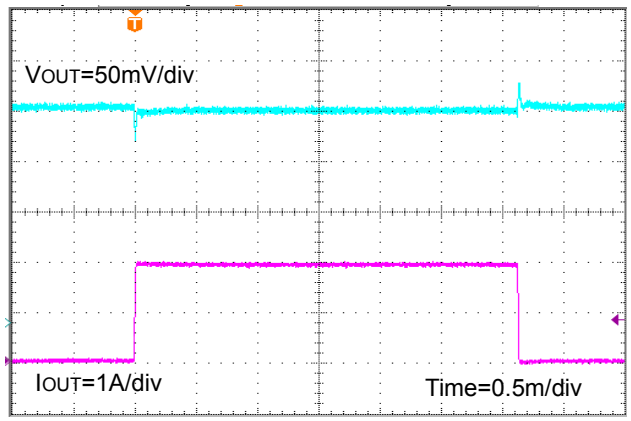

Figure 39. Load Transient Response IOUT=0A to 2A
(VIN=5V, VOUT=1.2V, FREQ=L, MODE=H, COUT=Ceramic 44μF)

© 2015 ROHM Co., Ltd. All rights reserved.

Application Example(s)

1. Basic Operation

(1) DC/DC Converter operation

BD9B200MUV is a synchronous rectifying step-down switching regulator that achieves faster transient response by employing constant on-time control system. It utilizes switching operation in PWM (Pulse Width Modulation) mode for heavier load, while it utilizes Deep-SLLM (Deep-Simple Light Load Mode) control for lighter load to improve efficiency.

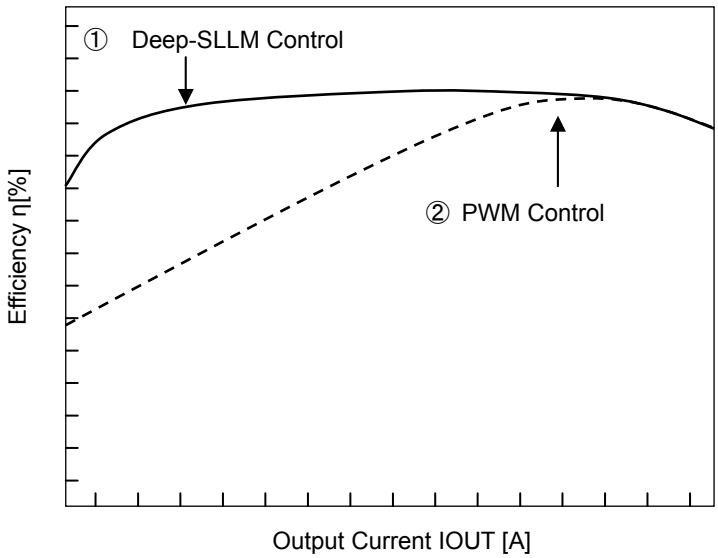

Figure 40. Efficiency (Deep-SLLM Control and PWM Control)

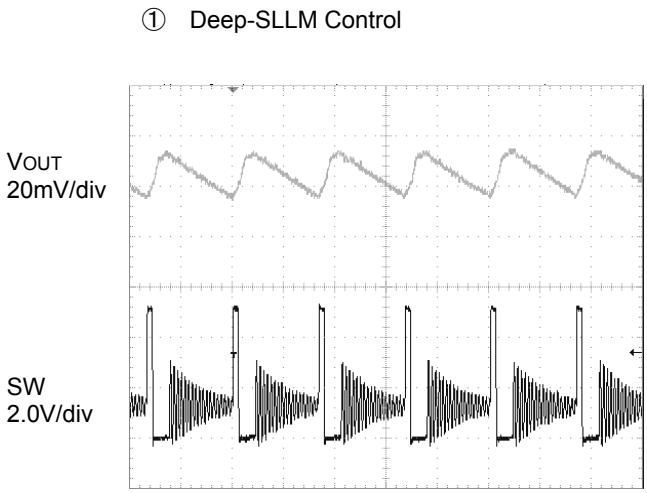

Figure 41. Switching Waveform at Deep-SLLM Control
(V_{IN}=5.0V, V_{OUT}=1.2V, I_{OUT}=100mA)

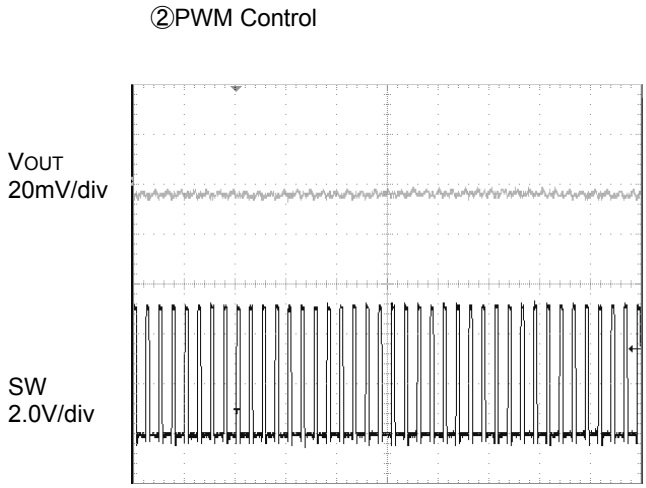

Figure 42. Switching Waveform at PWM Control
(V_{IN}=5.0V, V_{OUT}=1.2V, I_{OUT}=2A)

© 2015 ROHM Co., Ltd. All rights reserved.

(2) Enable Control

The IC shutdown can be controlled by the voltage applied to the EN terminal. When VEN reaches 2.0 V(Min), the internal circuit is activated and the IC starts up. To enable shutdown control with the EN terminal, the shutdown interval (Low level interval of EN) must be set to 100 μs or longer. Startup by EN must be at the same time or after the input of power supply voltage.

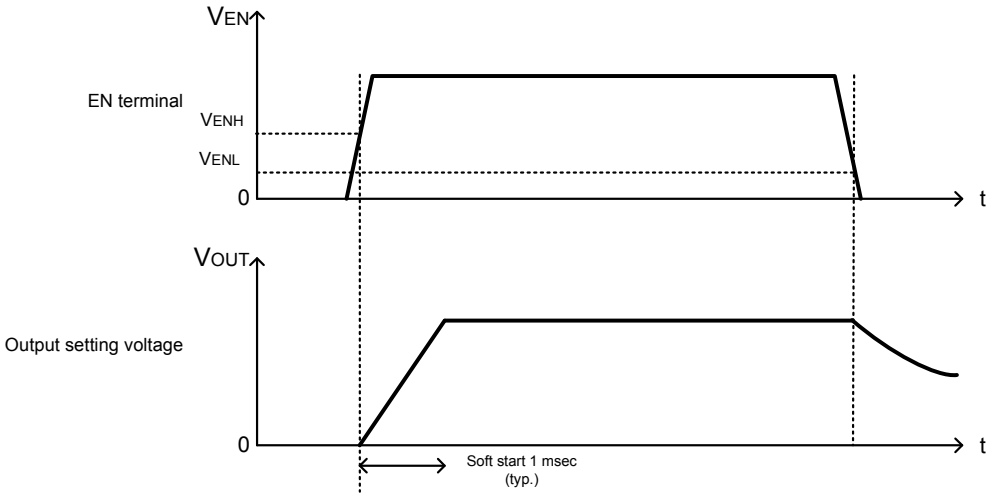

Figure 43. Start Up and Down with Enable

(3) Power Good

When the output voltage reaches more than 80% of the voltage setting, the open drain NMOSFET, internally connected to the PGD terminal, turns off and the PGD terminal turns to Hi-z condition. Also when the output voltage falls below 70% of voltage setting, the open drain NMOS FET turns on and PGD terminal pulls down with 100Ω. Connecting a pull up resistor (10KΩ to 100KΩ) is recommended.

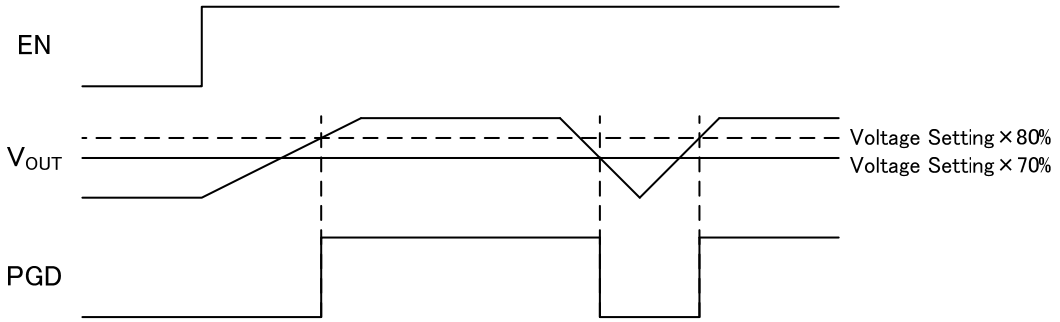

Figure 44. Power Good Timing Chart

(4) Soft Start

When EN terminal is turned High, Soft Start operates and output voltage gradually rises. With the Soft Start Function, over shoot of output voltage and rush current can be prevented. Rising time of output voltage when SS terminal is open is 1msec (Typ). Capacitor connected to SS terminal makes rising time more than 1msec. Please refer to page 23 for the method of setting rising time.

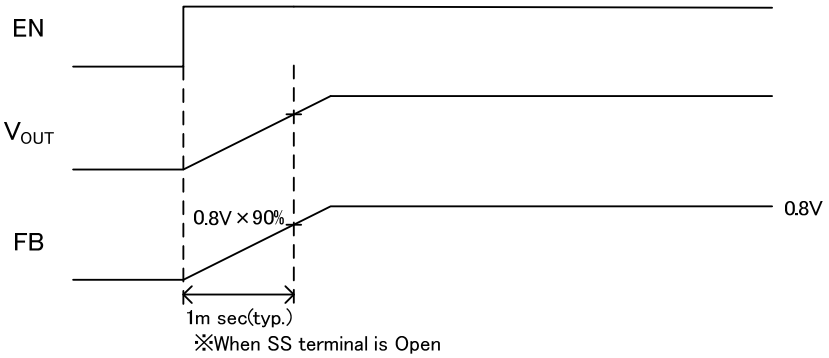

Figure 45. Soft Start Timing Chart

© 2015 ROHM Co., Ltd. All rights reserved.

2. Protection

The protective circuits are intended for prevention of damage caused by unexpected accidents. Do not use them for continuous protective operation

(1) Over Current Protection (OCP) / Short Circuit Protection (SCP)

Setting of Over current protection is 4.5A (Typ). When OCP is triggered, over current protection is realized by restricting On / Off Duty of current flowing in upper MOSFET by each switching cycle. Also, if Over current protection operates 512 cycles in a condition where FB terminal voltage reaches below 70% of internal standard voltage, Short Circuit protection (SCP) operates and stops switching for 1msec (Typ) before it initiates restart. However, during startup, Short circuit protection will not operate even if the IC is still in the SCP condition.

Table 1. Over Current Protection / Short Circuit Protection Function

EN terminal	PGD	Startup	Over current protection	Short circuit protection
More than 2.0V	L	While start up	Valid	Invalid
		Startup completed	Valid	Valid
	H	*	Valid	Invalid
Less than 0.8V	*	*	Invalid	Invalid

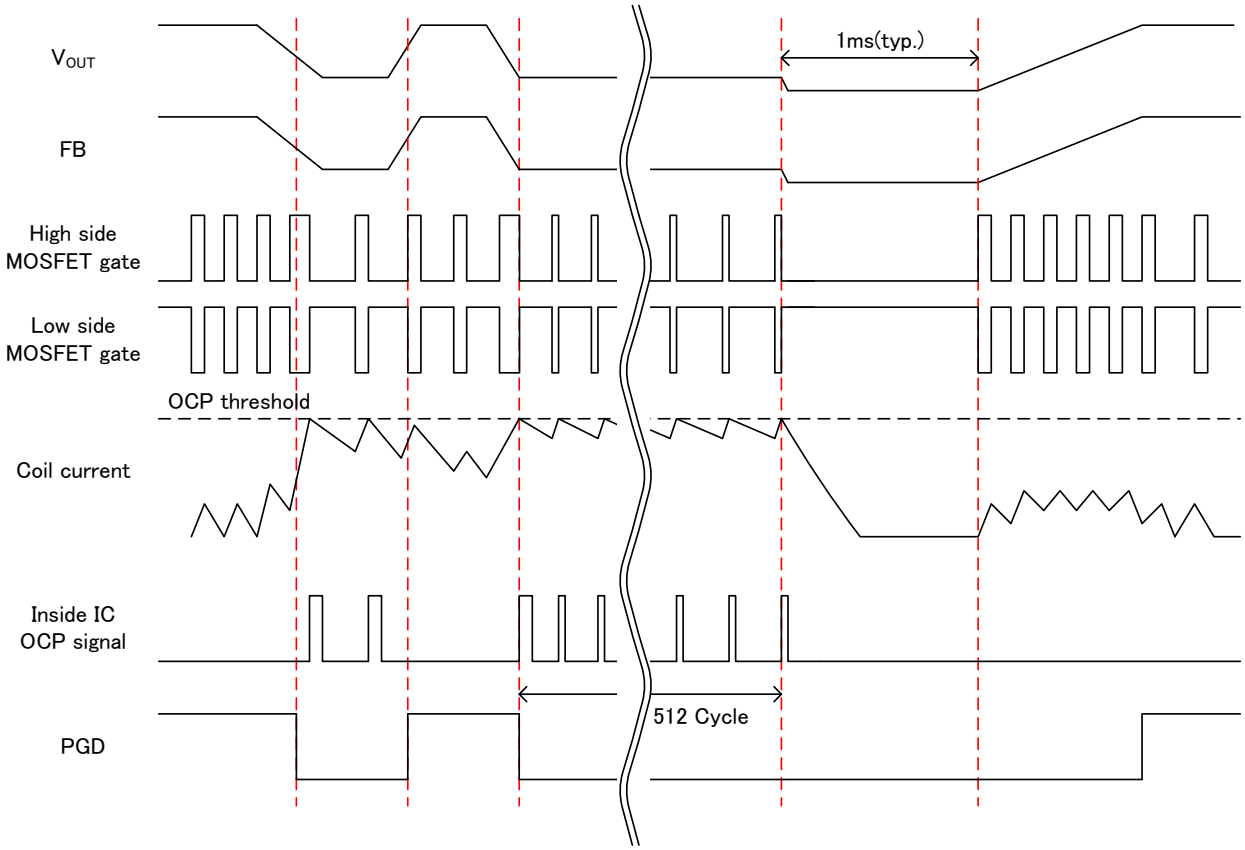

Figure 46. Short Circuit Protection (SCP) Timing Chart

© 2015 ROHM Co., Ltd. All rights reserved.

(2) Under Voltage Lockout Protection (UVLO)

The Under Voltage Lockout Protection circuit monitors the AVIN terminal voltage.
The operation enters standby when the AVIN terminal voltage is 2.45V (Typ) or lower.
The operation starts when the AVIN terminal voltage is 2.55V (Typ) or higher.

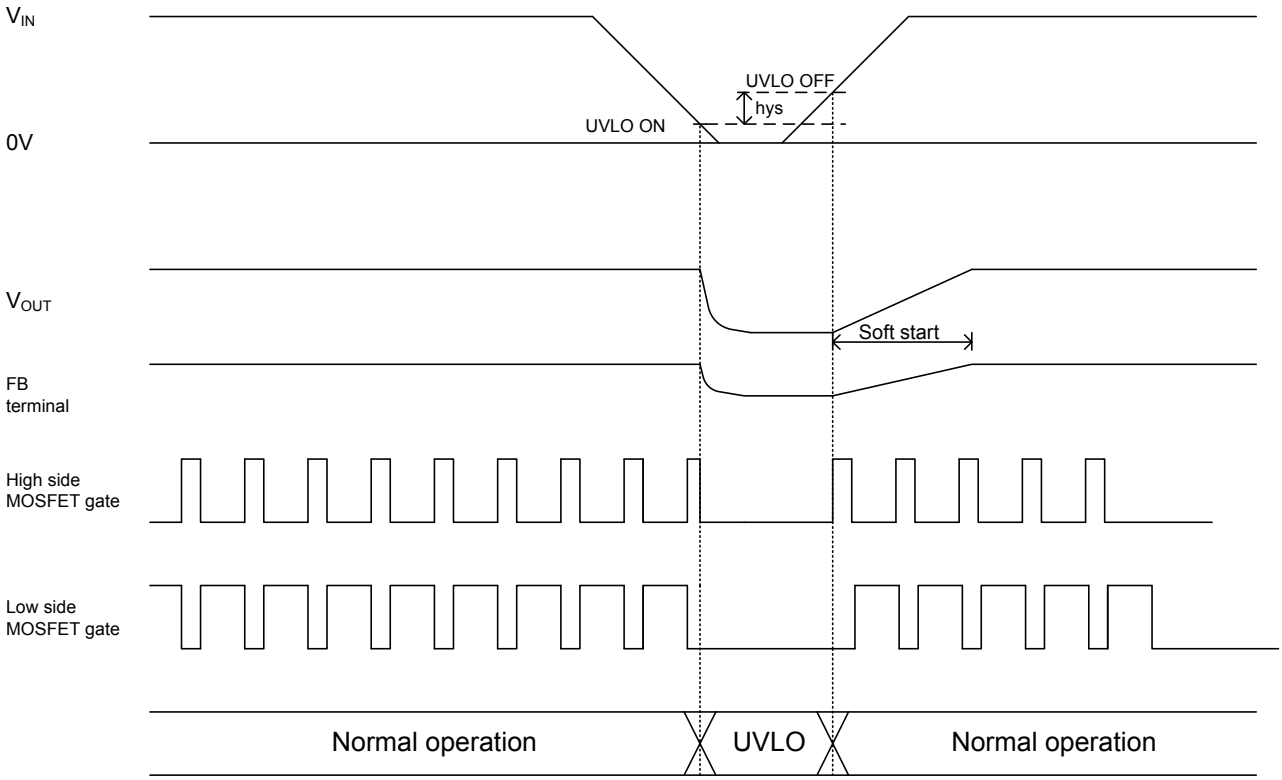

Figure 47. UVLO Timing Chart

(3) Thermal Shutdown

When the chip temperature exceeds Tj=175°C (Typ), the DC/DC converter output is stopped. The circuits are automatically restored to normal operation when the chip temperature falls. It has a hysteresis of 25°C (Typ). The thermal shutdown circuit is intended for shutting down the IC from thermal runaway in an abnormal state with the temperature exceeding Tjmax=150°C. It is not meant to protect or guarantee the soundness of the application. Do not use the function of this circuit for application protection design.

© 2015 ROHM Co., Ltd. All rights reserved.

Application Example

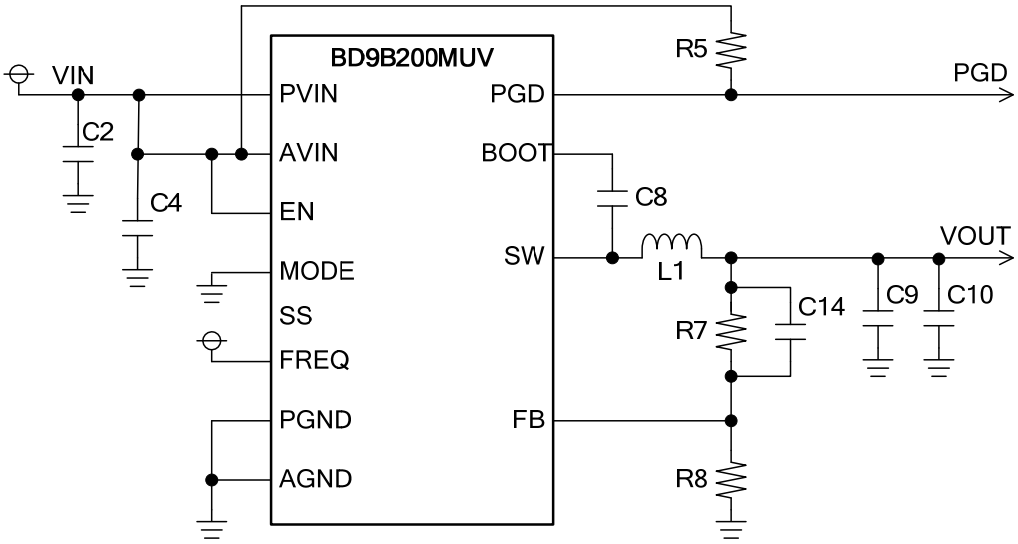

Figure 48. Application Circuit

Table 2. Recommended Component Values (VIN=5V, FREQ=H)

Reference Designator	VOUT					Description
	1.0V	1.2V	1.5V	1.8V	3.3V	
R5	100kΩ	100kΩ	100kΩ	100kΩ	100kΩ	-
R7	75kΩ	75kΩ	160kΩ	150kΩ	160kΩ	-
R8	300kΩ	150kΩ	180kΩ	120kΩ	51kΩ	-
C2(Note 3)	10μF	10μF	10μF	10μF	10μF	10V, X5R, 3216
C4	0.1μF	0.1μF	0.1μF	0.1μF	0.1μF	25V, X5R, 1608
C8(Note 4)	0.1μF	0.1μF	0.1μF	0.1μF	0.1μF	-
C9	22μF	22μF	22μF	22μF	22μF	6.3V, X5R, 3225
C10	22μF	22μF	22μF	22μF	22μF	6.3V, X5R, 3225
C14	120p	120pF	150pF	180pF	180pF	-
L1	1.5μH	1.5μH	1.5μH	1.5μH	1.5μH	TOKO, FDSD0420

Table 3. Recommended Component Values (VIN=5V, FREQ=L)

Reference Designator	VOUT					Description
	1.0V	1.2V	1.5V	1.8V	3.3V	
R5	100kΩ	100kΩ	100kΩ	100kΩ	100kΩ	-
R7	75kΩ	75kΩ	160kΩ	150kΩ	160kΩ	-
R8	300kΩ	150kΩ	180kΩ	120kΩ	51kΩ	-
C2(Note 3)	10μF	10μF	10μF	10μF	10μF	10V, X5R, 3216
C4	0.1μF	0.1μF	0.1μF	0.1μF	0.1μF	25V, X5R, 1608
C8(Note 4)	0.1μF	0.1μF	0.1μF	0.1μF	0.1μF	-
C9	22μF	22μF	22μF	22μF	22μF	6.3V, X5R, 3225
C10	22μF	22μF	22μF	22μF	22μF	6.3V, X5R, 3225
C14	100p	120pF	100pF	120pF	120pF	-
L1	1.0μH	1.0μH	1.0μH	1.0μH	1.0μH	TOKO, FDSD0420

(Note 3) For capacitance of input capacitor take temperature characteristics, DC bias characteristics, etc. into consideration to set minimum value to no less than 4.7μF.
(Note 4) For capacitance of bootstrap capacitor take temperature characteristics, DC bias characteristics, etc. into consideration to set minimum value to no less than 0.047μF.

※Evaluation using the actual machine must be done for above constant is only a value on our evaluation board.

© 2015 ROHM Co., Ltd. All rights reserved.

Selection of Components Externally Connected

1. Output LC Filter Constant

In order to supply a continuous current to the load, the DC/DC converter requires an LC filter for smoothing the output voltage. It is recommended to use inductors of values 0.47µH to 1.0µH when FREQ=L or 1.0µH to 1.5µH at FREQ=H.

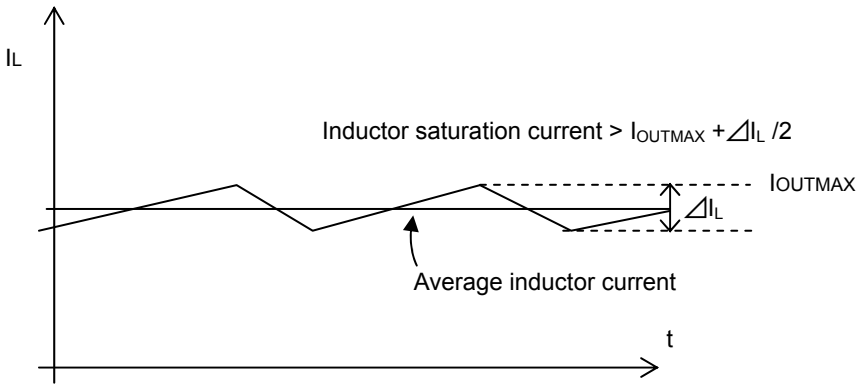

Figure 49. Waveform of current through inductor

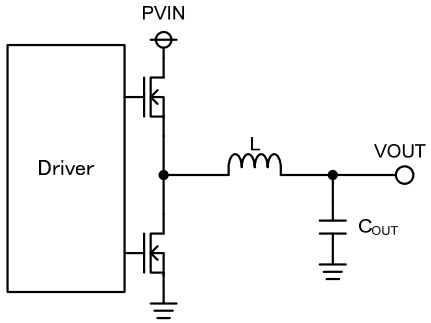

Figure 50. Output LC filter circuit

Inductor ripple current ΔIL

$$\Delta I_L = V_{OUT} \times (V_{IN} - V_{OUT}) \times \frac{1}{V_{IN} \times F_{SW} \times L} = 608[\text{mA}]$$

Where:
- VIN= 5V
- VOUT= 1.2V
- L=1.5µH
- F_{SW} =1MHz (switching frequency)

The saturation current of the inductor must be larger than the sum of the maximum output current and 1/2 of the inductor ripple current ΔIL.

The output capacitor COUT affects the output ripple voltage characteristics. The output capacitor C_{OUT} must satisfy the required ripple voltage characteristics.

The output ripple voltage can be represented by the following equation.

$$\Delta V_{RPL} = \Delta I_L \times (R_{ESR} + \frac{1}{8 \times C_{OUT} \times F_{SW}})[\text{V}]$$

where R_{ESR} is the Equivalent Series Resistance (ESR) of the output capacitor.

* The capacitor rating must allow a sufficient margin with respect to the output voltage.
The output ripple voltage can be decreased with a smaller ESR.
A ceramic capacitor of about 22 µF to 47 µF is recommended.

*Be careful of total capacitance value, when additional capacitor C_{LOAD} is connected in addition to output capacitor C_{OUT}.
Use maximum additional capacitor C_{LOAD} (Max) condition which satisfies the following condition.

$$\text{Maximum starting inductor ripple current } IL_{START} < \text{Over Current limit 2.9A(Min)}$$

Maximum starting inductor ripple current I_{LSTART} can be expressed using the following equation.

$$IL_{START} = \text{Maximum starting output current}(I_{OMAX}) + \text{Charge current to output capacitor}(I_{CAP}) + \frac{\Delta I_L}{2}$$

© 2015 ROHM Co., Ltd. All rights reserved.

Charge current to output capacitor I_{CAP} can be expressed using the following equation.

$$I_{CAP} = \frac{(C_{OUT} + C_{LOAD}) \times V_{OUT}}{T_{SS}} [\mathrm{A}]$$

For example, given V_{IN}= 5V, V_{OUT}= 3.3V, L= 1.5µH, switching frequency F_{SW}= 800kHz(Min), Output capacitor C_{OUT}= 44µF, Soft Start time T_{SS}= 0.5ms(Min), and load current during soft start I_{OSS}= 2A, maximum C_{LOAD} can be computed using the following equation.

$$C_{LOAD}(Max) < \frac{(2.9 - I_{OSS} - \Delta I_L/2) \times T_{SS}}{V_{OUT}} - C_{OUT} = 21.6 [\mu\mathrm{F}]$$

If the value of C_{LOAD} is large, and cannot meet the above equation, adjust the value of the capacitor C_{SS} to meet the condition below.

$$C_{LOAD}(Max) < \frac{(2.9 - I_{OSS} - \Delta I_L/2) \times V_{FB}}{V_{OUT} \times I_{SS}} \times C_{SS} - C_{OUT}$$

(Refer to the following items (3) Soft Start Setting equation of time T_{SS} and soft-start value of the capacitor to be connected to the C_{SS}.)

For example, given V_{IN} = 5V, V_{OUT} = 3.3V, L = 1.5µH, load current during soft start I_{OSS} = 2A, switching frequency F_{SW}= 800kHz (Min), Output capacitor C_{OUT} = 44µF, V_{FB} = 0.792V(Max), I_{SS} = 2.0µA(Max), with C_{LOAD} = 220uF, capacitor C_{SS} is computed as follows.

$$C_{SS} > \frac{V_{OUT} \times I_{SS}}{(2.9 - I_{OSS} - \Delta I_L/2) \times V_{FB}} \times (C_{LOAD} + C_{OUT}) = 5086 [\mathrm{pF}]$$

2. Output Voltage Setting

The output voltage value can be set by the feedback resistance ratio.
For stable operation, it is recommended to use feedback resistance R1 of more than 20kΩ.

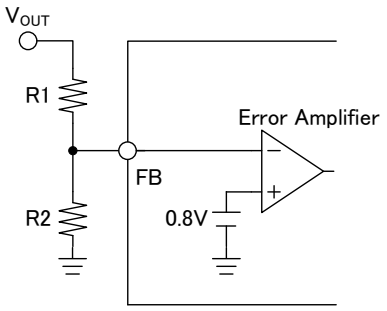

$$V_{OUT} = \frac{R1 + R2}{R2} \times 0.8 [\mathrm{V}]$$

$$R2 = \frac{0.8}{V_{OUT} - 0.8} \times R1 [\Omega]$$

Figure 51. Feedback Resistor Circuit

© 2015 ROHM Co., Ltd. All rights reserved.

3. Soft Start Setting

Turning the EN terminal signal High activates the soft start function. This causes the output voltage to rise gradually while the current at startup is placed under control. This allows the prevention of output voltage overshoot and inrush current. The rise time depends on the value of the capacitor connected to the SS terminal.

$$T_{SS} = (C_{SS} \times V_{FB})/I_{SS}$$
$$C_{SS} = (I_{SS} \times T_{SS})/V_{FB}$$

Where :

T_{SS} is Soft Start Time

C_{SS} is Capacitor connected to Soft Start Time Terminal

V_{FB} is FB Terminal Voltage (0.8V (Typ))

I_{SS} is Soft Start Terminal Source Current (1.0μA(Typ))

with $C_{SS} = 0.01\mu F$,

$$T_{SS} = (0.01[\mu F] \times 0.8[V])/1.0[\mu A]$$
$$= 8.0[msec]$$

Turning the EN terminal signal High with the SS terminal open or with the terminal signal High (no capacitor connected) causes the output voltage to rise in 1msec (Typ).

4. FB Capacitor

Generally, in fixed ON time control (hysteresis control), sufficient ripple voltage in FB voltage is needed to operate comparator stably. Regarding this IC, by injecting ripple voltage to FB voltage inside IC it is designed to correspond to low ESR output capacitor. Please set the FB capacitor within the range of the following expression to inject an appropriate ripple.

$$\frac{V_{OUT} \times (1 - \frac{V_{OUT}}{V_{IN}})}{F_{SW} \times 7.65 \times 10^3} < C_{FB} < \frac{V_{OUT} \times (1 - \frac{V_{OUT}}{V_{IN}})}{F_{SW} \times 3.3 \times 10^3}$$

Where :

V_{IN} is Input Voltage

V_{OUT} is Output Voltage

F_{SW} is Switching Frequency

© 2015 ROHM Co., Ltd. All rights reserved.

PCB Layout Design

In the step-down DC/DC converter, a large pulse current flows into two loops. The first loop is the one into which the current flows when the High-Side FET is turned ON. The flow starts from the input capacitor CIN, runs through the FET, inductor L and output capacitor COUT and back to GND of CIN via GND of COUT. The second loop is the one into which the current flows when the Low-Side FET is turned on. The flow starts from the Low-Side FET, runs through the inductor L and output capacitor COUT and back to GND of the Low-Side FET via GND of COUT. Route these two loops as thick and as short as possible to allow noise to be reduced for improved efficiency. It is recommended to connect the input and output capacitors directly to the GND plane. The PCB layout has a great influence on the DC/DC converter in terms of all of the heat generation, noise and efficiency characteristics.

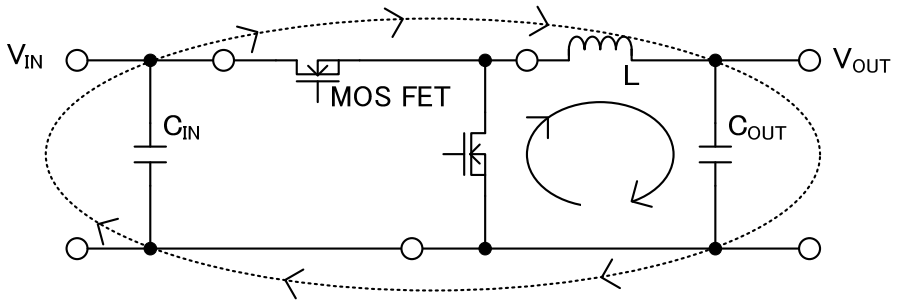

Figure 52. Current Loop of Buck Converter

Accordingly, design the PCB layout considering the following points.

- Connect an input capacitor as close as possible to the IC PVIN terminal on the same plane as the IC.
- If there is any unused area on the PCB, provide a copper foil plane for the GND node to assist heat dissipation from the IC and the surrounding components.
- Switching nodes such as SW are susceptible to noise due to AC coupling with other nodes. Route the coil pattern as thick and as short as possible.
- Provide lines connected to FB far from the SW nodes.
- Place the output capacitor away from the input capacitor in order to avoid the effect of harmonic noise from the input.

Power Dissipation

When designing the PCB layout and peripheral circuitry, sufficient consideration must be given to ensure that the power dissipation is within the allowable dissipation curve.

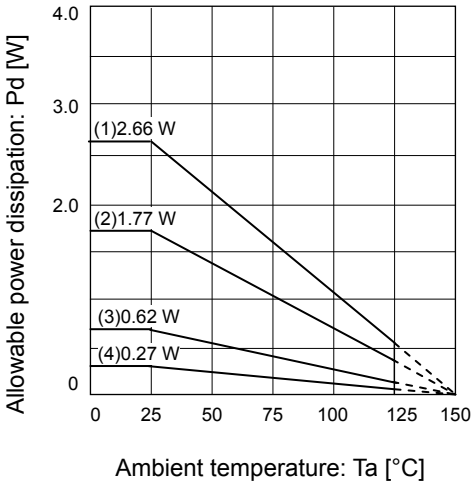

Figure 53. Thermal Derating Characteristics
(VQFN016V3030)

(1) 4-layer board (surface heat dissipation copper foil 5505 mm^2)
(copper foil laminated on each layer)
θ_{JA} = 47.0°C/W
(2) 4-layer board (surface heat dissipation copper foil 6.28 mm^2)
(copper foil laminated on each layer)
θ_{JA} = 70.62°C/W
(3) 1-layer board (surface heat dissipation copper foil 6.28 mm^2)
θ_{JA} = 201.6°C/W
(4) IC only
θ_{JA} = 462.9°C/W

Board specification: Glass-Epoxy, 70mm x 70mm x 1.6mm
Copper foil thickness: Front side and reverse side 70μm be used,
2nd and 3rd 35μm be used.

© 2015 ROHM Co., Ltd. All rights reserved.

I/O equivalence circuit(s)

6. FB	7. FREQ
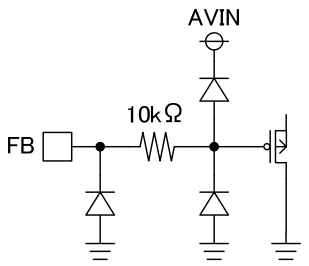	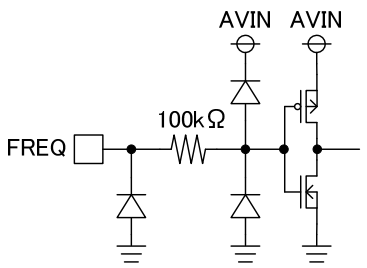
8. MODE	**9. SS**
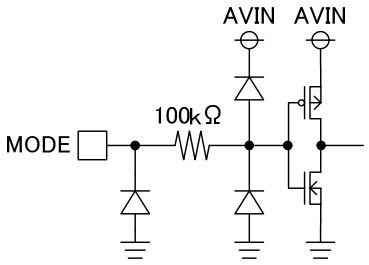	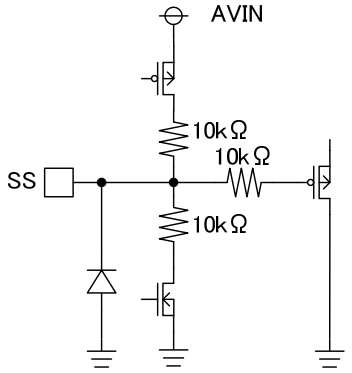
10.11.12. SW	**13. BOOT**
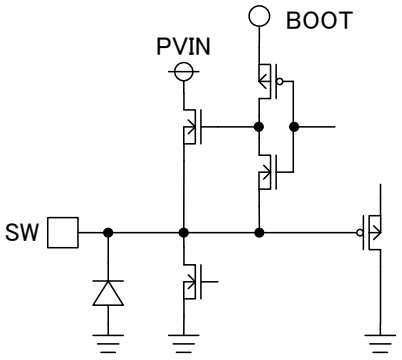	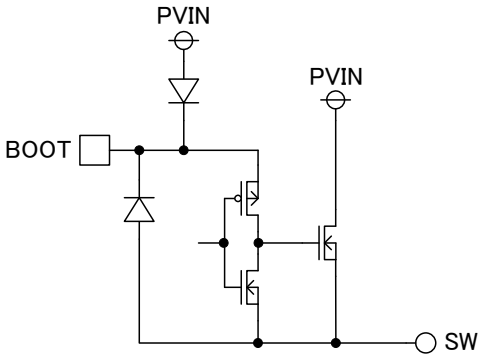
14. PGD	**15. EN**
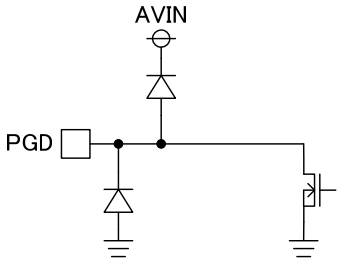	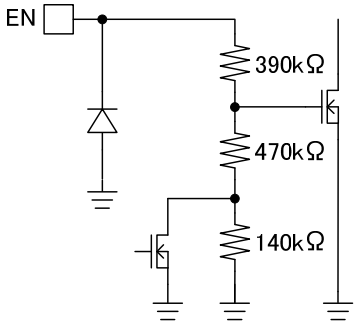

© 2015 ROHM Co., Ltd. All rights reserved.

Operational Notes

1. **Reverse Connection of Power Supply**
   Connecting the power supply in reverse polarity can damage the IC. Take precautions against reverse polarity when connecting the power supply, such as mounting an external diode between the power supply and the IC's power supply pins.

2. **Power Supply Lines**
   Design the PCB layout pattern to provide low impedance supply lines. Separate the ground and supply lines of the digital and analog blocks to prevent noise in the ground and supply lines of the digital block from affecting the analog block. Furthermore, connect a capacitor to ground at all power supply pins. Consider the effect of temperature and aging on the capacitance value when using electrolytic capacitors.

3. **Ground Voltage**
   Ensure that no pins are at a voltage below that of the ground pin at any time, even during transient condition.

4. **Ground Wiring Pattern**
   When using both small-signal and large-current ground traces, the two ground traces should be routed separately but connected to a single ground at the reference point of the application board to avoid fluctuations in the small-signal ground caused by large currents. Also ensure that the ground traces of external components do not cause variations on the ground voltage. The ground lines must be as short and thick as possible to reduce line impedance.

5. **Thermal Consideration**
   Should by any chance the power dissipation rating be exceeded, the rise in temperature of the chip may result in deterioration of the properties of the chip. The absolute maximum rating of the Pd stated in this specification is when the IC is mounted on a 70mm x 70mm x 1.6mm glass epoxy board. In case of exceeding this absolute maximum rating, increase the board size and copper area to prevent exceeding the Pd rating.

6. **Recommended Operating Conditions**
   These conditions represent a range within which the expected characteristics of the IC can be approximately obtained. The electrical characteristics are guaranteed under the conditions of each parameter.

7. **Inrush Current**
   When power is first supplied to the IC, it is possible that the internal logic may be unstable and inrush current may flow instantaneously due to the internal powering sequence and delays, especially if the IC has more than one power supply. Therefore, give special consideration to power coupling capacitance, power wiring, width of ground wiring, and routing of connections.

8. **Operation Under Strong Electromagnetic Field**
   Operating the IC in the presence of a strong electromagnetic field may cause the IC to malfunction.

9. **Testing on Application Boards**
   When testing the IC on an application board, connecting a capacitor directly to a low-impedance output pin may subject the IC to stress. Always discharge capacitors completely after each process or step. The IC's power supply should always be turned off completely before connecting or removing it from the test setup during the inspection process. To prevent damage from static discharge, ground the IC during assembly and use similar precautions during transport and storage.

10. **Inter-pin Short and Mounting Errors**
    Ensure that the direction and position are correct when mounting the IC on the PCB. Incorrect mounting may result in damaging the IC. Avoid nearby pins being shorted to each other especially to ground, power supply and output pin. Inter-pin shorts could be due to many reasons such as metal particles, water droplets (in very humid environment) and unintentional solder bridge deposited in between pins during assembly to name a few.

© 2015 ROHM Co., Ltd. All rights reserved.

Operational Notes – continued

11. Unused Input Pins

Input pins of an IC are often connected to the gate of a MOS transistor. The gate has extremely high impedance and extremely low capacitance. If left unconnected, the electric field from the outside can easily charge it. The small charge acquired in this way is enough to produce a significant effect on the conduction through the transistor and cause unexpected operation of the IC. So unless otherwise specified, unused input pins should be connected to the power supply or ground line.

12. Regarding the Input Pin of the IC

This monolithic IC contains P+ isolation and P substrate layers between adjacent elements in order to keep them isolated. P-N junctions are formed at the intersection of the P layers with the N layers of other elements, creating a parasitic diode or transistor. For example (refer to figure below):

When GND > Pin A and GND > Pin B, the P-N junction operates as a parasitic diode.
When GND > Pin B, the P-N junction operates as a parasitic transistor.

Parasitic diodes inevitably occur in the structure of the IC. The operation of parasitic diodes can result in mutual interference among circuits, operational faults, or physical damage. Therefore, conditions that cause these diodes to operate, such as applying a voltage lower than the GND voltage to an input pin (and thus to the P substrate) should be avoided.

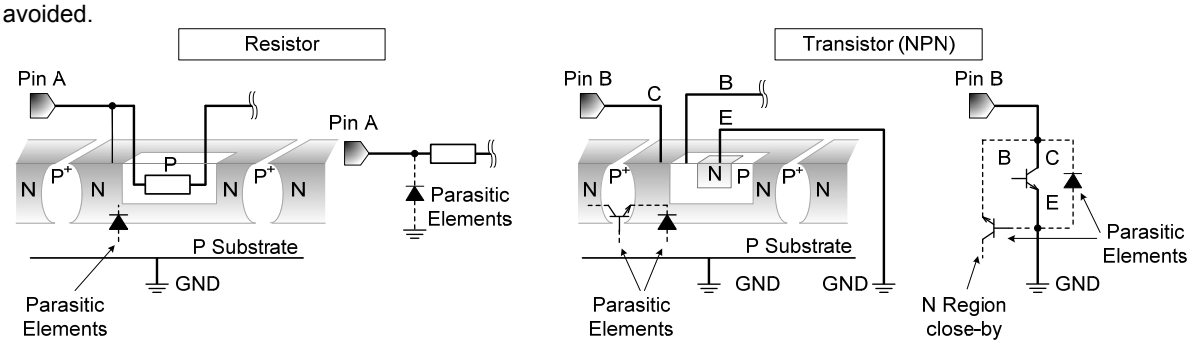

Figure 54. Example of monolithic IC structure

13. Ceramic Capacitor

When using a ceramic capacitor, determine the dielectric constant considering the change of capacitance with temperature and the decrease in nominal capacitance due to DC bias and others.

14. Area of Safe Operation (ASO)

Operate the IC such that the output voltage, output current, and power dissipation are all within the Area of Safe Operation (ASO).

15. Thermal Shutdown Circuit(TSD)

This IC has a built-in thermal shutdown circuit that prevents heat damage to the IC. Normal operation should always be within the IC's power dissipation rating. If however the rating is exceeded for a continued period, the junction temperature (Tj) will rise which will activate the TSD circuit that will turn OFF all output pins. When the Tj falls below the TSD threshold, the circuits are automatically restored to normal operation.
Note that the TSD circuit operates in a situation that exceeds the absolute maximum ratings and therefore, under no circumstances, should the TSD circuit be used in a set design or for any purpose other than protecting the IC from heat damage.

16. Over Current Protection Circuit (OCP)

This IC incorporates an integrated overcurrent protection circuit that is activated when the load is shorted. This protection circuit is effective in preventing damage due to sudden and unexpected incidents. However, the IC should not be used in applications characterized by continuous operation or transitioning of the protection circuit.

© 2015 ROHM Co., Ltd. All rights reserved.

Ordering Information

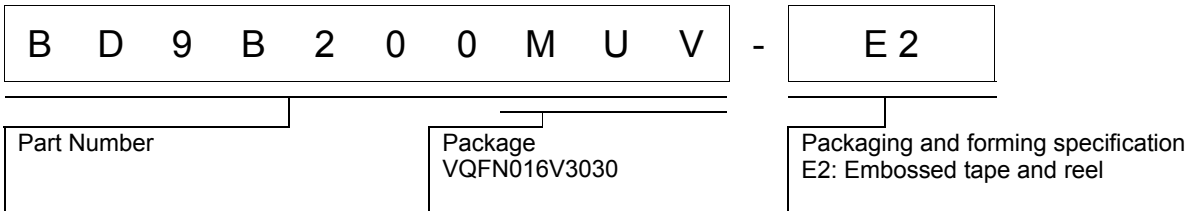

Marking Diagrams

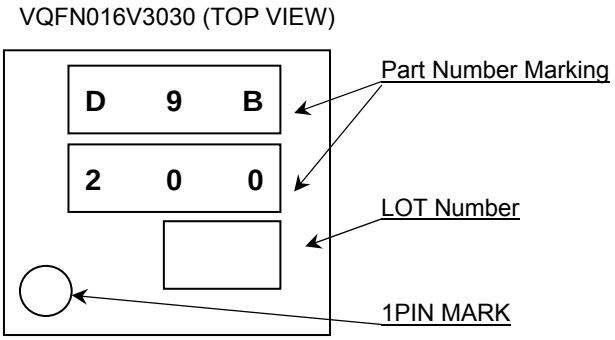

© 2015 ROHM Co., Ltd. All rights reserved.

Physical Dimension, Tape and Reel Information

Package Name	VQFN016V3030

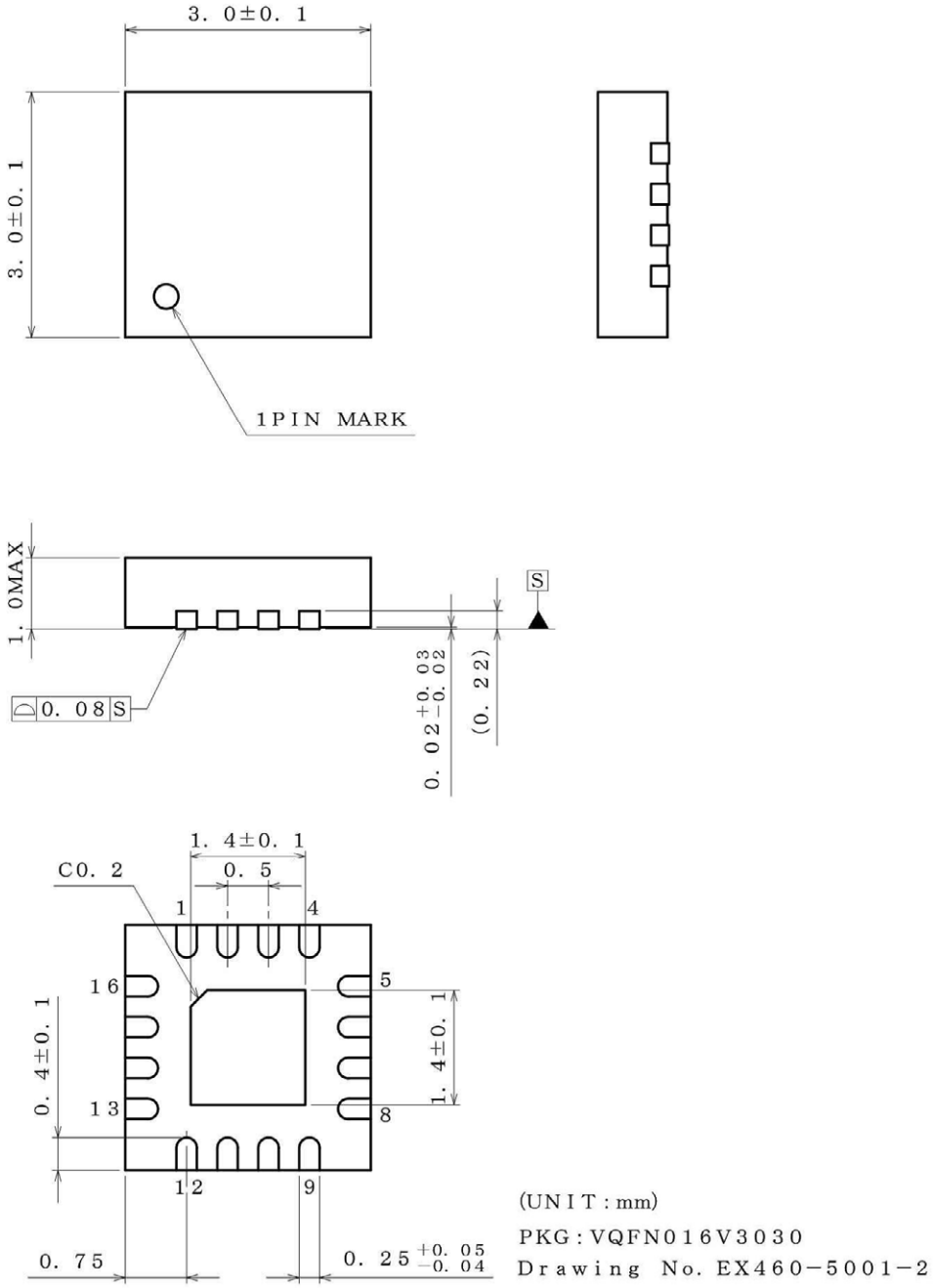

<Tape and Reel information>

Tape	Embossed carrier tape
Quantity	3000pcs
Direction of feed	E2 (The direction is the 1pin of product is at the upper left when you hold reel on the left hand and you pull out the tape on the right hand)

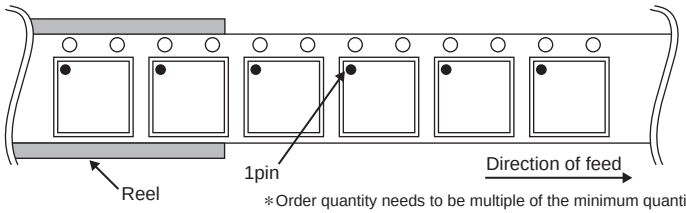

∗Order quantity needs to be multiple of the minimum quantity.

© 2015 ROHM Co., Ltd. All rights reserved.

Revision History

Date	Revision	Changes
28.Aug.2015	001	New Release

© 2015 ROHM Co., Ltd. All rights reserved.

Notice

Precaution on using ROHM Products

1. Our Products are designed and manufactured for application in ordinary electronic equipments (such as AV equipment, OA equipment, telecommunication equipment, home electronic appliances, amusement equipment, etc.). If you intend to use our Products in devices requiring extremely high reliability (such as medical equipment (Note 1), transport equipment, traffic equipment, aircraft/spacecraft, nuclear power controllers, fuel controllers, car equipment including car accessories, safety devices, etc.) and whose malfunction or failure may cause loss of human life, bodily injury or serious damage to property ("Specific Applications"), please consult with the ROHM sales representative in advance. Unless otherwise agreed in writing by ROHM in advance, ROHM shall not be in any way responsible or liable for any damages, expenses or losses incurred by you or third parties arising from the use of any ROHM's Products for Specific Applications.

(Note1) Medical Equipment Classification of the Specific Applications

JAPAN	USA	EU	CHINA
CLASSⅢ	CLASSⅢ	CLASSⅡb	CLASSⅢ
CLASSⅣ		CLASSⅢ	

2. ROHM designs and manufactures its Products subject to strict quality control system. However, semiconductor products can fail or malfunction at a certain rate. Please be sure to implement, at your own responsibilities, adequate safety measures including but not limited to fail-safe design against the physical injury, damage to any property, which a failure or malfunction of our Products may cause. The following are examples of safety measures:
   [a] Installation of protection circuits or other protective devices to improve system safety
   [b] Installation of redundant circuits to reduce the impact of single or multiple circuit failure

3. Our Products are designed and manufactured for use under standard conditions and not under any special or extraordinary environments or conditions, as exemplified below. Accordingly, ROHM shall not be in any way responsible or liable for any damages, expenses or losses arising from the use of any ROHM's Products under any special or extraordinary environments or conditions. If you intend to use our Products under any special or extraordinary environments or conditions (as exemplified below), your independent verification and confirmation of product performance, reliability, etc, prior to use, must be necessary:
   [a] Use of our Products in any types of liquid, including water, oils, chemicals, and organic solvents
   [b] Use of our Products outdoors or in places where the Products are exposed to direct sunlight or dust
   [c] Use of our Products in places where the Products are exposed to sea wind or corrosive gases, including Cl_2, H_2S, NH_3, SO_2, and NO_2
   [d] Use of our Products in places where the Products are exposed to static electricity or electromagnetic waves
   [e] Use of our Products in proximity to heat-producing components, plastic cords, or other flammable items
   [f] Sealing or coating our Products with resin or other coating materials
   [g] Use of our Products without cleaning residue of flux (even if you use no-clean type fluxes, cleaning residue of flux is recommended); or Washing our Products by using water or water-soluble cleaning agents for cleaning residue after soldering
   [h] Use of the Products in places subject to dew condensation

4. The Products are not subject to radiation-proof design.

5. Please verify and confirm characteristics of the final or mounted products in using the Products.

6. In particular, if a transient load (a large amount of load applied in a short period of time, such as pulse. is applied, confirmation of performance characteristics after on-board mounting is strongly recommended. Avoid applying power exceeding normal rated power; exceeding the power rating under steady-state loading condition may negatively affect product performance and reliability.

7. De-rate Power Dissipation (Pd) depending on Ambient temperature (Ta). When used in sealed area, confirm the actual ambient temperature.

8. Confirm that operation temperature is within the specified range described in the product specification.

9. ROHM shall not be in any way responsible or liable for failure induced under deviant condition from what is defined in this document.

Precaution for Mounting / Circuit board design

1. When a highly active halogenous (chlorine, bromine, etc.) flux is used, the residue of flux may negatively affect product performance and reliability.

2. In principle, the reflow soldering method must be used on a surface-mount products, the flow soldering method must be used on a through hole mount products. If the flow soldering method is preferred on a surface-mount products, please consult with the ROHM representative in advance.

For details, please refer to ROHM Mounting specification

© 2015 ROHM Co., Ltd. All rights reserved.

Precautions Regarding Application Examples and External Circuits

1. If change is made to the constant of an external circuit, please allow a sufficient margin considering variations of the characteristics of the Products and external components, including transient characteristics, as well as static characteristics.

2. You agree that application notes, reference designs, and associated data and information contained in this document are presented only as guidance for Products use. Therefore, in case you use such information, you are solely responsible for it and you must exercise your own independent verification and judgment in the use of such information contained in this document. ROHM shall not be in any way responsible or liable for any damages, expenses or losses incurred by you or third parties arising from the use of such information.

Precaution for Electrostatic

This Product is electrostatic sensitive product, which may be damaged due to electrostatic discharge. Please take proper caution in your manufacturing process and storage so that voltage exceeding the Products maximum rating will not be applied to Products. Please take special care under dry condition (e.g. Grounding of human body / equipment / solder iron, isolation from charged objects, setting of Ionizer, friction prevention and temperature / humidity control).

Precaution for Storage / Transportation

1. Product performance and soldered connections may deteriorate if the Products are stored in the places where:
   [a] the Products are exposed to sea winds or corrosive gases, including Cl2, H2S, NH3, SO2, and NO2
   [b] the temperature or humidity exceeds those recommended by ROHM
   [c] the Products are exposed to direct sunshine or condensation
   [d] the Products are exposed to high Electrostatic

2. Even under ROHM recommended storage condition, solderability of products out of recommended storage time period may be degraded. It is strongly recommended to confirm solderability before using Products of which storage time is exceeding the recommended storage time period.

3. Store / transport cartons in the correct direction, which is indicated on a carton with a symbol. Otherwise bent leads may occur due to excessive stress applied when dropping of a carton.

4. Use Products within the specified time after opening a humidity barrier bag. Baking is required before using Products of which storage time is exceeding the recommended storage time period.

Precaution for Product Label

QR code printed on ROHM Products label is for ROHM's internal use only.

Precaution for Disposition

When disposing Products please dispose them properly using an authorized industry waste company.

Precaution for Foreign Exchange and Foreign Trade act

Since concerned goods might be fallen under listed items of export control prescribed by Foreign exchange and Foreign trade act, please consult with ROHM in case of export.

Precaution Regarding Intellectual Property Rights

1. All information and data including but not limited to application example contained in this document is for reference only. ROHM does not warrant that foregoing information or data will not infringe any intellectual property rights or any other rights of any third party regarding such information or data.

2. ROHM shall not have any obligations where the claims, actions or demands arising from the combination of the Products with other articles such as components, circuits, systems or external equipment (including software).

3. No license, expressly or implied, is granted hereby under any intellectual property rights or other rights of ROHM or any third parties with respect to the Products or the information contained in this document. Provided, however, that ROHM will not assert its intellectual property rights or other rights against you or your customers to the extent necessary to manufacture or sell products containing the Products, subject to the terms and conditions herein.

Other Precaution

1. This document may not be reprinted or reproduced, in whole or in part, without prior written consent of ROHM.

2. The Products may not be disassembled, converted, modified, reproduced or otherwise changed without prior written consent of ROHM.

3. In no event shall you use in any way whatsoever the Products and the related technical information contained in the Products or this document for any military purposes, including but not limited to, the development of mass-destruction weapons.

4. The proper names of companies or products described in this document are trademarks or registered trademarks of ROHM, its affiliated companies or third parties.

© 2015 ROHM Co., Ltd. All rights reserved.

General Precaution

1. Before you use our Products, you are requested to carefully read this document and fully understand its contents. ROHM shall not be in any way responsible or liable for failure, malfunction or accident arising from the use of any ROHM's Products against warning, caution or note contained in this document.

2. All information contained in this document is current as of the issuing date and subject to change without any prior notice. Before purchasing or using ROHM's Products, please confirm the latest information with a ROHM sales representative.

3. The information contained in this document is provided on an "as is" basis and ROHM does not warrant that all information contained in this document is accurate and/or error-free. ROHM shall not be in any way responsible or liable for any damages, expenses or losses incurred by you or third parties resulting from inaccuracy or errors of or concerning such information.

© 2015 ROHM Co., Ltd. All rights reserved.