5.5 V to 104.5 V Input Voltage Range 1 A Output Built-in MOSFET

5.5 V to 104.5 V Input, Ultra-low-Iq, 1 A Synchronous Buck DCDC Converter

BD9G145EFJ-LB

General Description

This product is a ranked product for the industrial equipment market. This is the best product for use in these applications. BD9G145EFJ-LB is synchronous Buck DCDC Converter and designed to regulate over a wide input voltage range from 5.5 V to 104.5 V. It can be used for high voltage 48 V bus system with Minimum controllable ON time 100 ns and large step-down conversion ratios. And it can simplify system configuration and achieve cost reduction. DCDC control method is Fixed Frequency Current Mode PWM Control. The Switching frequency can be set from 200 kHz to 1 MHz with an external resistor at RT pin. Under Voltage Lockout, Over Current Protection, Thermal Shutdown and all PINs (except for BST) which have 110 V withstand voltage can realize system robustness.

Features

- Wide Input Voltage Range 5.5 V to 104.5 V
- Wide Output Voltage Range 2.5 V to 68 V
- Built-in Hi-side NFET Rdson 790 mΩ, Lo-side NFET Rdson 330 mΩ
- Fixed Frequency Current Mode PWM Control
- Adjustable Frequency by RT 200 kHz to 1 MHz
- All PINs Except for BST Have 110 V Withstand Voltage
- Soft Start
- Ultra-low-Iq 10.0 µA No Switching
- Shutdown Current 1.0 µA
- Over Current Protection (OCP), Input Under Voltage Lockout (UVLO), Thermal Shutdown (TSD)

Applications

- Industrial Equipment
- 48 V/12 V Bus System
- High-cell Battery Application, e.g. E-bike
- Motor Drive
- Telecom System

Key Specifications

Input Voltage Range	5.5 V to 104.5 V
Output Voltage Range	2.5 V to 68 V
Output Current	1 A (Max)
Switching Frequency Range	200 kHz to 1 MHz
Hi-side NFET Rdson	790 mΩ (Typ)
Lo-side NFET Rdson	330 mΩ (Typ)
Shutdown Current	1 µA (Typ)
Operating Temperature	-40 °C to +125 °C

Package	W (Typ) x D (Typ) x H (Max)
HTSOP-J8	4.9 mm x 6.0 mm x 1.0 mm

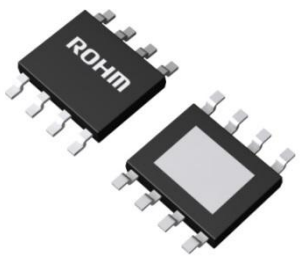

HTSOP-J8

Typical Application Circuit

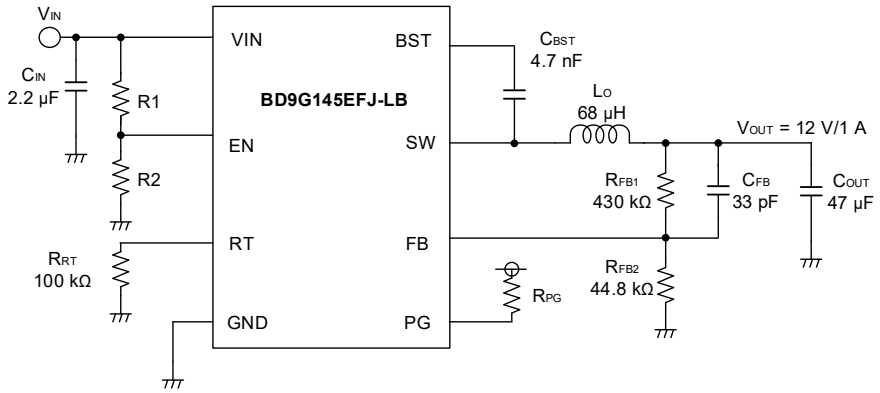

Figure 1. Typical Application Circuit

○Product structure : Silicon integrated circuit ○This product has no designed protection against radioactive rays

© 2024 ROHM Co., Ltd. All rights reserved.

Pin Configuration

(TOP VIEW)

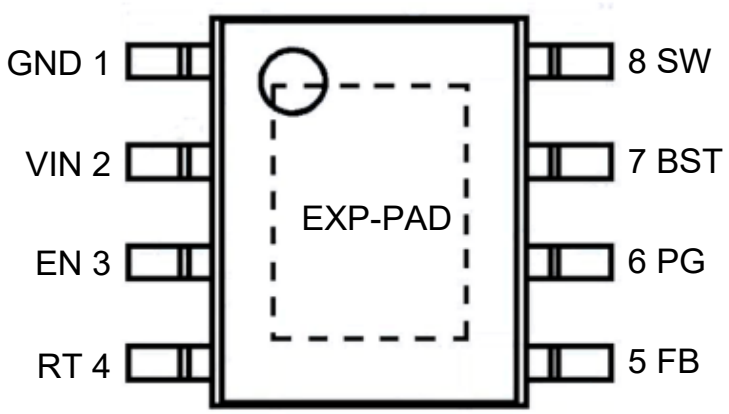

Figure 2. Pin Configuration

Pin Description

Pin No.	Pin Name	Description
1	GND	Ground connection for internal circuits
2	VIN	Regulator supply input pin
3	EN	Enable input. ON/OFF control for the DCDC and UVLO programming pin. The EN voltage is above 1.4 V, the start-up sequence begins. Less than 1.31 V is disabled from enabled status.
4	RT	The internal oscillator frequency set pin. The internal oscillator is set with a single resistor connected between this pin and the GND pin.
5	FB	Voltage feedback pin. This pin is the error-amp input with the DC voltage is set at 1.125 V with feed-back operation.
6	PG	Power Good indicator. This pin is an open-drain output pin. Connect to a source voltage through an external pullup resistor between 10 kΩ to 100 kΩ.
7	BST	Connect a bootstrap capacitor of 4.7 nF (Typ) between this pin and the SW pin. The voltage of this capacitor is the gate drive of the High Side FET.
8	SW	Switching node that is internally connected to the source of the high-side NMOS buck switch and the drain of the low-side NMOS synchronous rectifier. Connect to the switching node of the power inductor.
-	EXP-PAD	The EXP-PAD is connected to the P substrate of the IC. Connect this pad to the internal PCB ground plane using multiple via holes to obtain excellent heat dissipation characteristics.

© 2024 ROHM Co., Ltd. All rights reserved.

Block Diagram

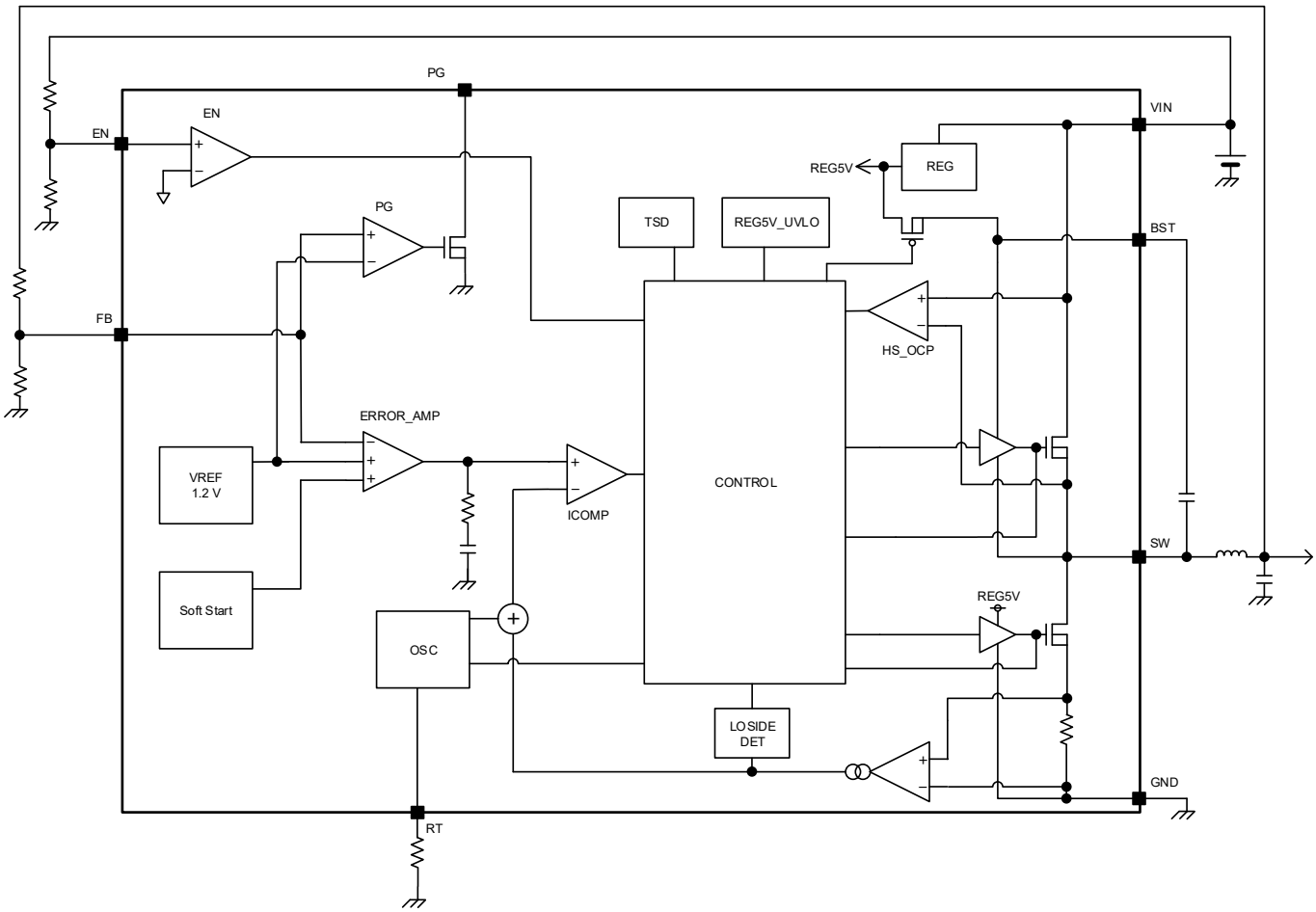

Figure 3. Block Diagram

Description of Blocks

1. VREF
   This block generates reference voltage.

2. REG
   Regulator for internal circuit power supply.

3. OSC
   This block generates inner CLK.
   The internal oscillator is set with a single resistor connected between this pin and the GND pin.
   Recommended frequency range is 200 kHz to 1 MHz. If the RT pin connects to 100kΩ, frequency is set 300 kHz.

4. TSD
   Thermal Shutdown Protection Circuit.
   When it detects the temperature exceeding Maximum Junction Temperature (Tj = 150 °C), it turns off the output FET, and resets Soft Start circuit. It has a hysteresis function. When the temperature decreases, the chip automatically returns to normal operation.

5. REG5V_UVLO
   Under Voltage Lockout Circuit for Internal voltage REG5V.
   This prevents internal circuit errors during increase and decrease of power supply voltage.

6. EN
   ON/OFF control for the DCDC and UVLO programming.
   The EN voltage is above 1.4 V, the start-up sequence begins. Less than 1.31 V is disabled from enabled status.

7. PG
   If the FB voltage exceeds 1.069 V, PG switch turns off. If the FB voltage falls below 1.013 V, PG switch turns on.

© 2024 ROHM Co., Ltd. All rights reserved.

Description of Blocks - continued

8. Soft Start
   This is a circuit that gently raises the output voltage of the DCDC converter to prevent in-rush current during start-up. Soft Start Time is 3 ms (Typ) when the IC operates with the 300 kHz (Typ).

9. ERROR_AMP
   This is an error amplifier that detects output signal, and outputs PWM control signal.
   Internal reference voltage is set to 1.125 V.

10. ICOMP
    This is a comparator that outputs PWM signal from current feed-back signal and error-amp output for current-mode.

11. LO SIDE DET
    This block stops the switching by detecting reverse current of the SW current at discontinuous current mode control.

12. HS_OCP
    This block detects the current flowing through the High Side FET and limits the current of 1.4 A (Min) or more. This function works in abnormal situation such as the SW pin shorted to GND condition to prevent the High Side FET from destruction.

13. CONTROL
    This block controls switching operation and protection functions.

© 2024 ROHM Co., Ltd. All rights reserved.

Absolute Maximum Ratings

Parameter	Symbol	Rating	Unit
Input Voltage	V_{VIN}	-0.3 to +110	V
BST – GND	V_{BST}	-0.3 to +110	V
BST – SW(Note 1)	ΔV_{BST}	-0.3 to +7	V
EN – GND	V_{EN}	-0.3 to +110	V
SW – GND	V_{SW}	-1.0 to +110	V
SW – GND (5 ns pulse width)	V_{SWAC}	-4	V
RT – GND	V_{RT}	-0.3 to +110	V
PG – GND	V_{PG}	-0.3 to +110	V
FB – GND	V_{FB}	-0.3 to +110	V
Maximum Junction Temperature	Tjmax	150	°C
Storage Temperature Range	Tstg	-55 to +150	°C

Caution 1: *Operating the IC over the absolute maximum ratings may damage the IC. The damage can either be a short circuit between pins or an open circuit between pins and the internal circuitry. Therefore, it is important to consider circuit protection measures, such as adding a fuse, in case the IC is operated over the absolute maximum ratings.*

Caution 2: *Should by any chance the maximum junction temperature rating be exceeded the rise in temperature of the chip may result in deterioration of the properties of the chip. In case of exceeding this absolute maximum rating, design a PCB with thermal resistance taken into consideration by increasing board size and copper area so as not to exceed the maximum junction temperature rating.*

(Note 1) Because this IC Voltage from SW to BST absolute maximum rating is 7.0 V, do not short VIN Pin to BST Pin after power ON.

Thermal Resistance(Note 2)

Parameter	Symbol	Thermal Resistance (Typ)		Unit
		1s(Note 4)	2s2p(Note 5)	
HTSOP-J8				
Junction to Ambient	θ_{JA}	206.4	45.2	°C/W
Junction to Top Characterization Parameter(Note 3)	Ψ_{JT}	21	13	°C/W

(Note 2) Based on JESD51-2A(Still-Air)
(Note 3) The thermal characterization parameter to report the difference between junction temperature and the temperature at the top center of the outside surface of the component package.
(Note 4) Using a PCB board based on JESD51-3.
(Note 5) Using a PCB board based on JESD51-5, 7.

Layer Number of Measurement Board	Material	Board Size
Single	FR-4	114.3 mm x 76.2 mm x 1.57 mmt

Top	
Copper Pattern	Thickness
Footprints and Traces	70 µm

Layer Number of Measurement Board	Material	Board Size	Thermal Via(Note 6)	
			Pitch	Diameter
4 Layers	FR-4	114.3 mm x 76.2 mm x 1.6 mmt	1.20 mm	Φ 0.30 mm

Top		2 Internal Layers		Bottom	
Copper Pattern	Thickness	Copper Pattern	Thickness	Copper Pattern	Thickness
Footprints and Traces	70 µm	74.2 mm x 74.2 mm	35 µm	74.2 mm x 74.2 mm	70 µm

(Note 6) This thermal via connect with the copper pattern of layers 1,2, and 4. The placement and dimensions obey a land pattern.

© 2024 ROHM Co., Ltd. All rights reserved.

Recommended Operating Ratings

Parameter	Symbol	Min	Typ	Max	Unit
Input Voltage	V_{VIN}	5.5	-	104.5	V
Output Current	I_{OUT}	-	-	1	A
Output Voltage	V_{OUT}	2.5	-	68	V
Switching Frequency	f_{SW}	200	-	1000	kHz
Operating Temperature	Topr	-40	-	+125	°C

Electrical Characteristics (Unless otherwise specified V_{VIN} = 24 V, V_{EN} = 2 V, Tj = -40 °C to +125 °C)

Parameter	Symbol	Min	Typ	Max	Unit	Conditions
VIN Shutdown Current	I_{SDN}	-	1.0	12.0	µA	
VIN SLEEP Current	I_{SLEEP}	-	10.0	25.0	µA	V_{EN} = V_{VIN} , V_{FB} = 1.5 V
EN ON Threshold Voltage	V_{ENH}	1.35	1.40	1.45	V	
EN OFF Threshold Voltage	V_{ENL}	1.26	1.31	1.36	V	
EN Input Current	I_{EN}	-1	0	+1	µA	
Reference Voltage	V_{FB}	1.114	1.125	1.136	V	
FB Input Current	I_{FB}	-1	0	+1	µA	
SW Switching Frequency	f_{SW}	200	-	1000	kHz	
Hide Side NFET Rdson	R_{ONH}	-	790	-	mΩ	Ta = 25 °C
Low Side NFET Rdson	R_{ONL}	-	330	-	mΩ	Ta = 25 °C
PG Low to High Threshold Voltage	V_{PGR}	1.034	1.069	1.104	V	
PG High to Low Threshold Voltage	V_{PGF}	0.978	1.013	1.048	V	
PG Pulldown Resistance	R_{PG}	-	45	-	Ω	Ta = 25 °C
Soft Start Time	t_{SS}	2.0	3.0	4.0	ms	R_{RT} =100 kΩ
Over Current Protection	I_{OCP}	1.05	1.30	1.85	A	Output Current, Ta = 25 °C

© 2024 ROHM Co., Ltd. All rights reserved.

Typical Performance Characteristics

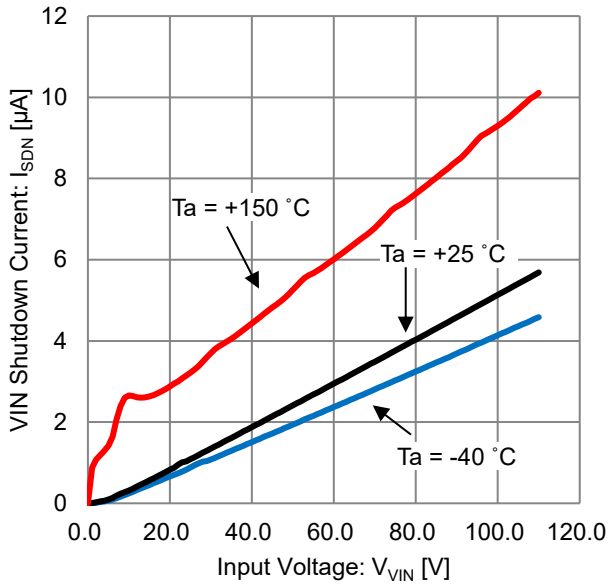

Figure 4. VIN Shutdown Current vs Input Voltage
(V_{EN} = 0 V)

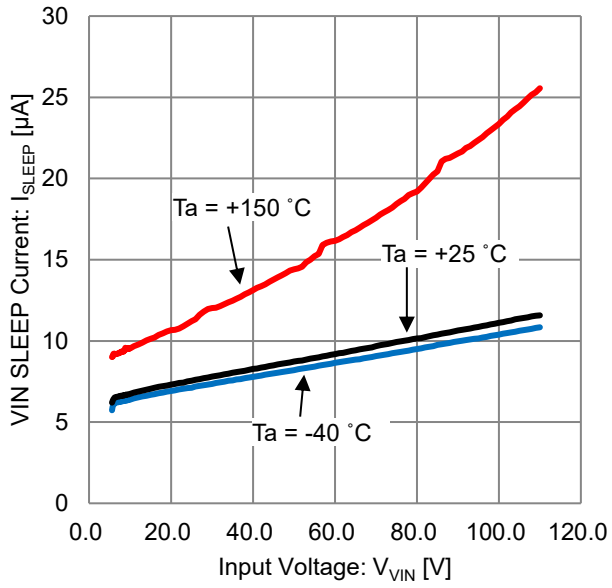

Figure 5. VIN SLEEP Current vs Input Voltage
(V_{EN} = V_{VIN} , V_{FB} = 1.5 V)

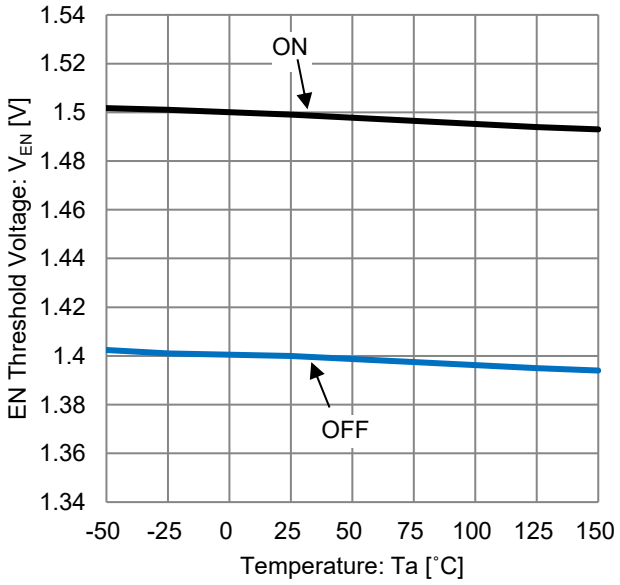

Figure 6. EN Threshold Voltage vs Temperature

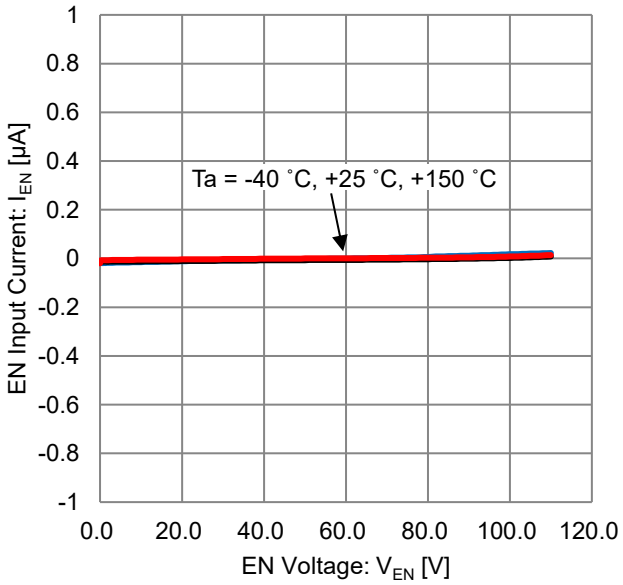

Figure 7. EN Input Current vs EN Voltage
(V_{VIN} = 110 V)

© 2024 ROHM Co., Ltd. All rights reserved.

Typical Performance Characteristics - continued

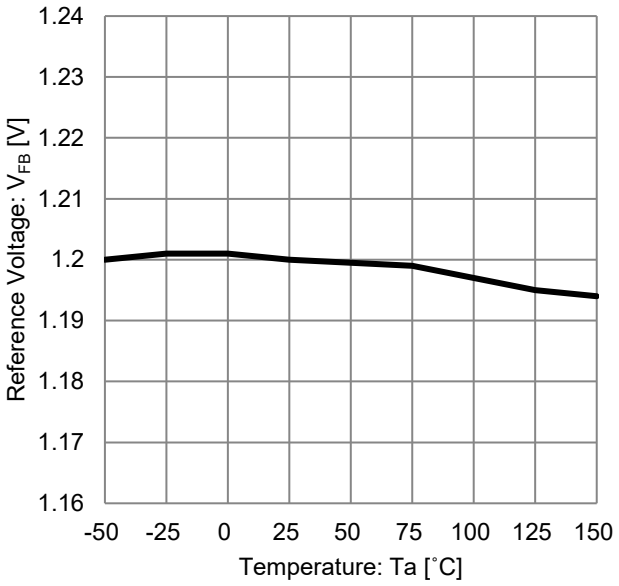

Figure 8. Reference Voltage vs Temperature

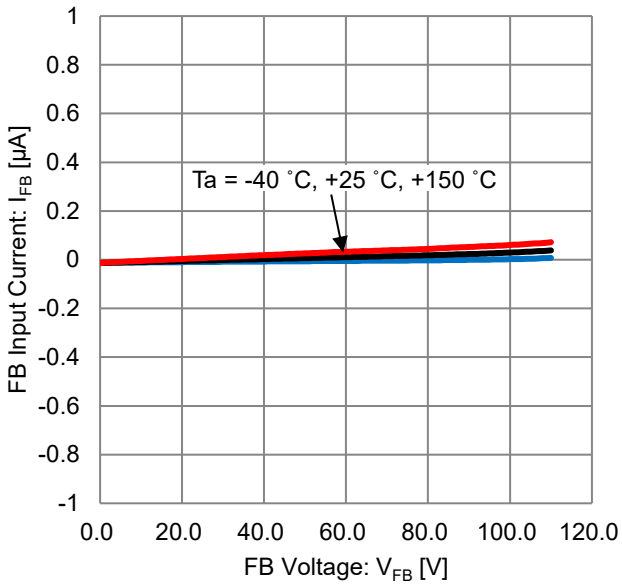

Figure 9. FB Input Current vs FB Voltage
(V_{VIN} = 110 V)

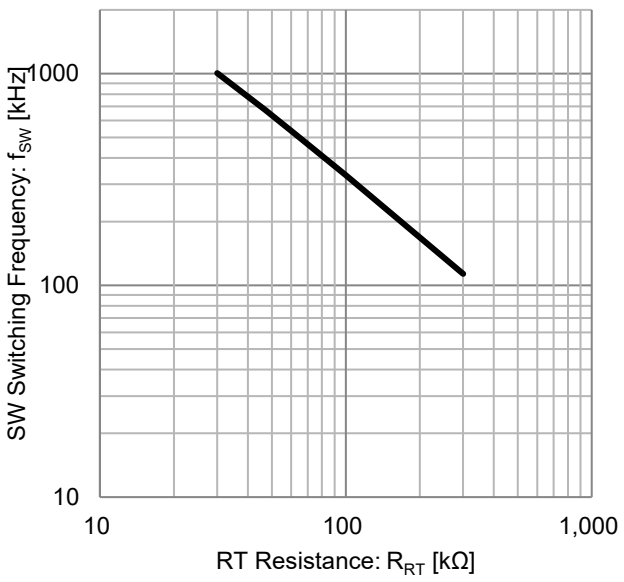

Figure 10. SW Switching Frequency vs RT Resistance

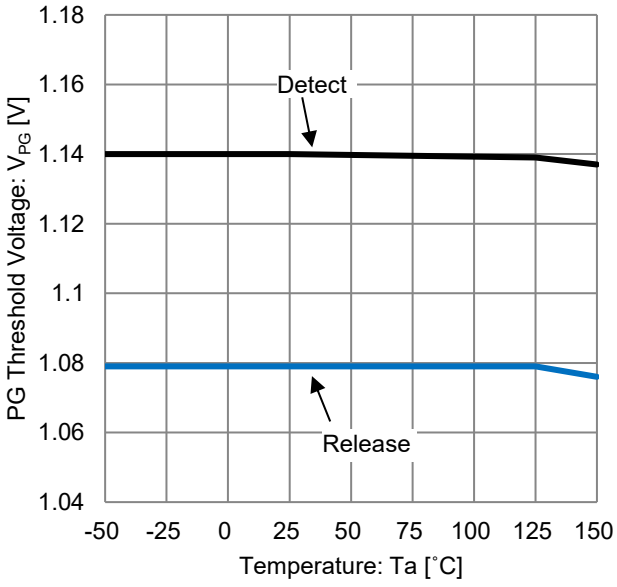

Figure 11. PG Threshold Voltage vs Temperature

© 2024 ROHM Co., Ltd. All rights reserved.

Typical Performance Characteristics - continued

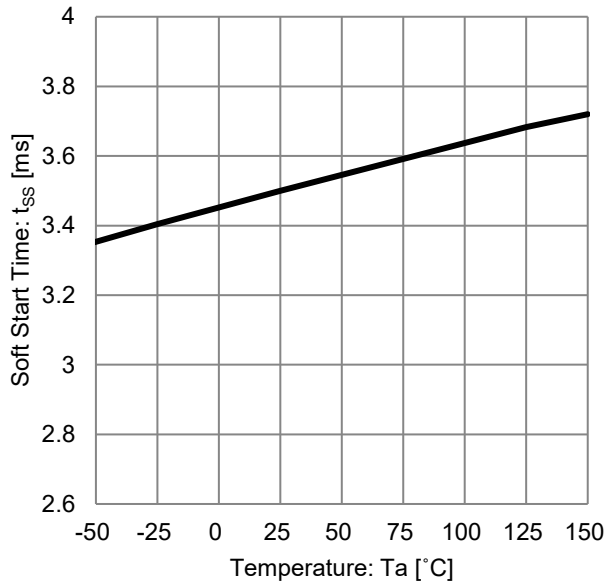

Figure 12. Soft Start Time vs Temperature
(R_{RT} = 100 kΩ)

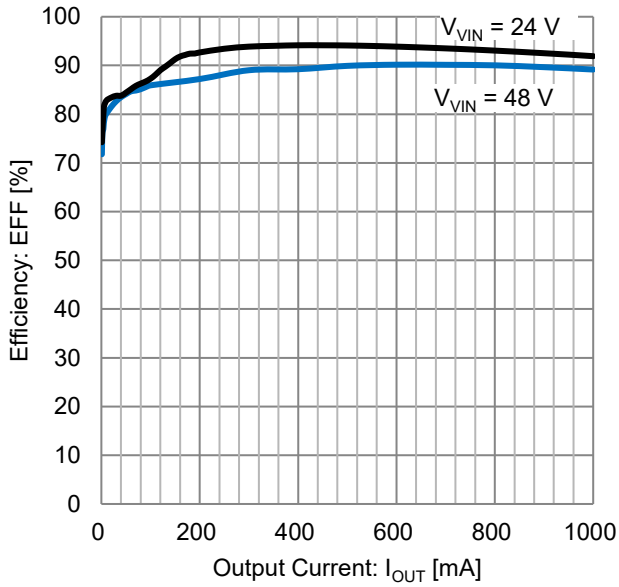

Figure 13. Efficiency vs Output Current
(V_{OUT} = 12 V, f_{SW} = 300 kHz)

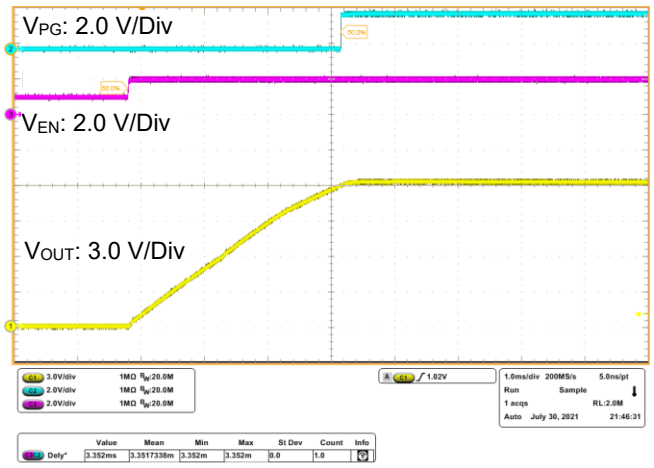

Figure 14. Startup
(V_{OUT} = 12 V, f_{SW} = 300 kHz)

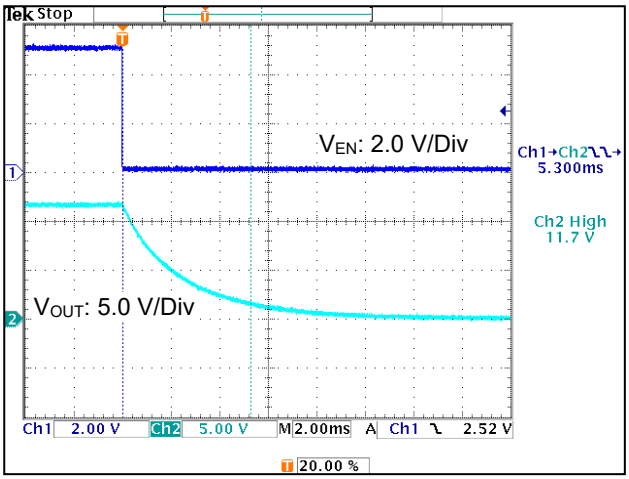

Figure 15. Shutdown
(V_{OUT} = 12 V, f_{SW} = 300 kHz, Load Resistance = 60 Ω)

© 2024 ROHM Co., Ltd. All rights reserved.

Detailed Description

1. Output Voltage Setting
   The internal reference voltage of error-amplifier is 1.125 V. Output voltage is determined by the following formula.

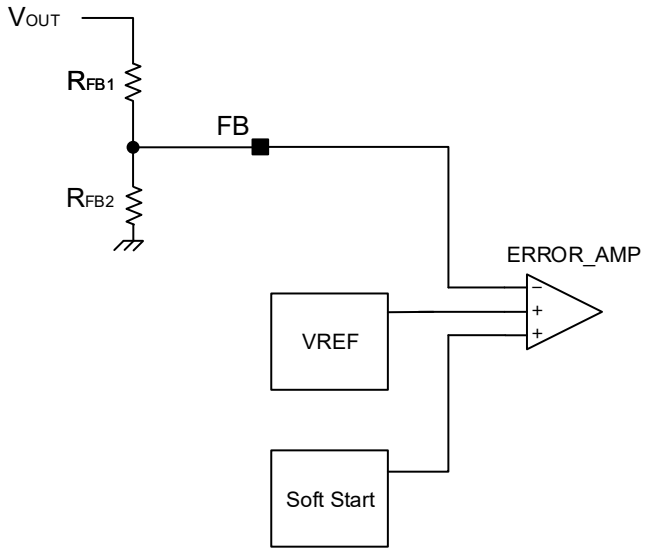

Output voltage:

$$V_{OUT} = \frac{R_{FB1} + R_{FB2}}{R_{FB2}} \times 1.125 \ \text{[V]}$$

Figure 16. Output Voltage Setting

2. Min Duty (Don_min)
   There are output voltage restrictions by Min Duty.
   The Min Duty required is as follows with min on time (100 ns).

$$D_{on_min} = (100\ ns \times f_{osc}) \times 100 \ \text{[\%]}$$

3. Low Drop Out Operation
   For the BST pin charge, that is the drive voltage of the High-side Nch FET, input and output limit is set by Max Duty.
   Operation Duty is calculated as follows by input and output voltage to use and a load.

$$D_{on} = \frac{V_{OUT}}{V_{VIN} - R_{ONH} \times I_{OUT}} \times 100 \ \text{[\%]}$$

   Max Duty is calculated as follows by forced-off time (Typ: 200 ns) and operating frequency.

$$D_{on_max} = (1 - 200\ ns \times f_{osc}) \times 100 \ \text{[\%]}$$

4. Frequency Setting
   Arbitrary internal oscillator frequency setup is possible by connecting RT resistance. Recommended frequency range is 200 kHz to 1 MHz.
   For setting frequency f [Hz], RT resistance is looked for using the following formula.

$$R_{RT} = \frac{\frac{475}{f} - 16.15 \times 10^{-6}}{14.623 \times 10^{-9}} \ \text{[Ω]}$$

   If setting frequency is 300 kHz, R_{RT} is 100 kΩ.

© 2024 ROHM Co., Ltd. All rights reserved.

Detailed Description - continued

5. External UVLO Threshold Voltage Setting
   The high precision reset function is built in the EN pin of BD9G145EFJ-LB, and arbitrary low-voltage malfunction prevention setup is possible by connecting the EN pin to resistance division of input voltage.
   When you use, please set R_{EN1} and R_{EN2} to arbitrary voltage of IC turned off (Vuv) and turned on (Vrel) like below.

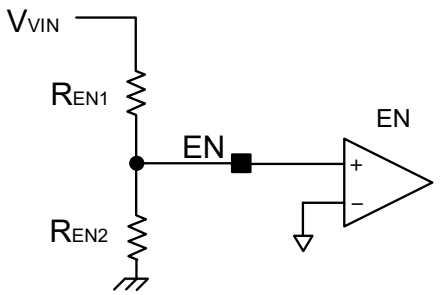

VIN voltage of IC turned off:

$$Vuv = \frac{1.31}{R_{EN2}}(R_{EN1} + R_{EN2}) \quad [V]$$

VIN voltage of IC turned on:

$$Vrel = \frac{1.4}{R_{EN2}}(R_{EN1} + R_{EN2}) \quad [V]$$

Figure 17. External UVLO Threshold

© 2024 ROHM Co., Ltd. All rights reserved.

Startup/Shutdown Timing Chart

Applying a high level to EN initiates V_{OUT} startup. When VOUT reaches the PG threshold voltage, V_{PG} asserts high. V_{OUT} rises with the soft start ramp, and the startup time is determined by the soft start time corresponding to the switching frequency. Pulling EN low causes V_{OUT} to shut down and V_{PG} to assert low. V_{OUT} discharges according to the current load.

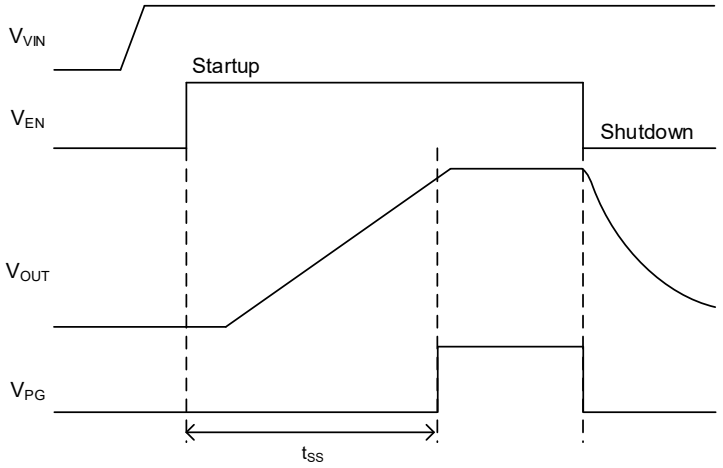

Figure 18. Startup/Shutdown Timing Chart

Application Examples

V_{OUT} = 12 V, f = 300 kHz
(All the external components can be substituted by equivalents)

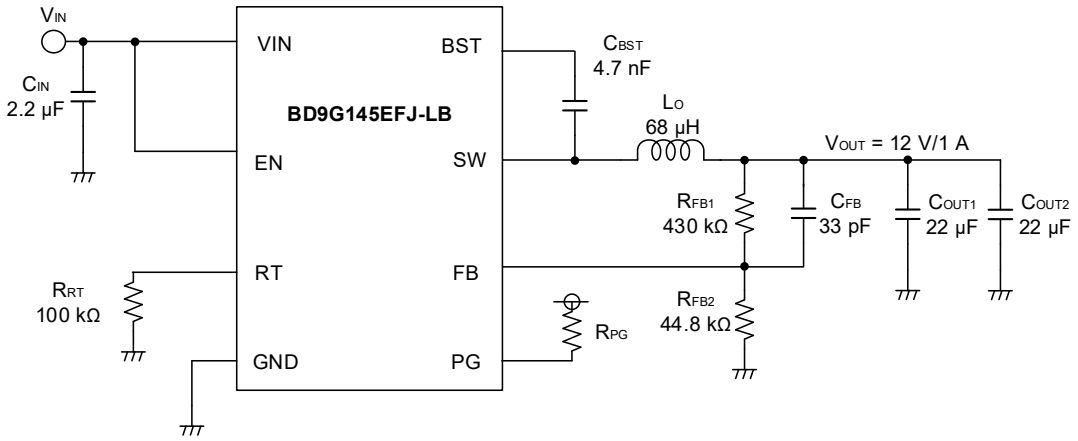

Figure 19. Application Example (V_{OUT} = 12 V, f = 300 kHz)

Table1. Parts List

No.	Package	Parameters	Part Name (Series)	Type	Manufacturer
C_{IN}	3225	2.2 µF, X7R, 100 V	MBJCH32MAB7225KPPA18	Ceramic	Taiyo Yuden
C_{BST}	1005	4.7 nF, X7R, 100 V	MBASH105SB7472KFCA18	Ceramic	Taiyo Yuden
C_{FB}	1005	33 pF, C0H/CH, 50 V	MBASU105SCH330JFNA18	Ceramic	Taiyo Yuden
C_{OUT1}	3225	22 µF, X7R, 25 V	MBAST32MSB7226KPNA18	Ceramic	Taiyo Yuden
C_{OUT2}	3225	22 µF, X7R, 25 V	MBAST32MSB7226KPNA18	Ceramic	Taiyo Yuden
L_O	-	68 µH	7447714680	Inductor	WRUTH
R_{FB1}	1608	430 kΩ	MCR03EZPFX4303	Chip resistor	ROHM
R_{FB2}	1608	43 kΩ	MCR03EZPFX4302	Chip resistor	ROHM
R_{RT}	1608	100 kΩ	MCR03EZPJ104	Chip resistor	ROHM

© 2024 ROHM Co., Ltd. All rights reserved.

I/O Equivalent Circuits

Pin Name	Equivalence circuit
VIN	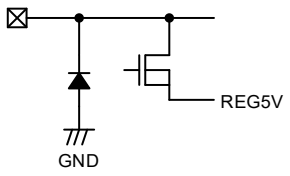
EN	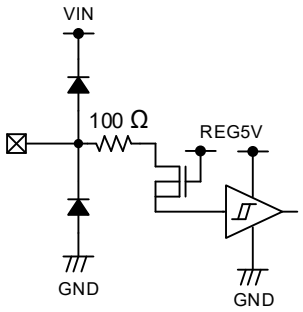
RT	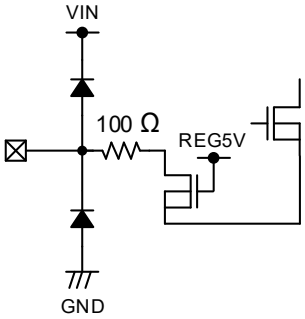
SW	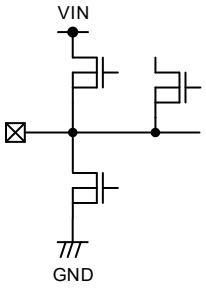

Pin Name	Equivalence circuit
BST	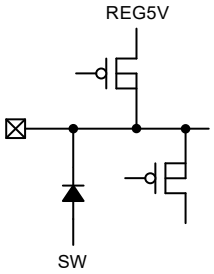
PG	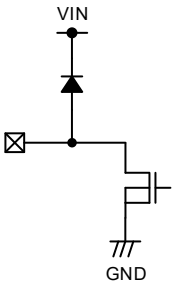
FB	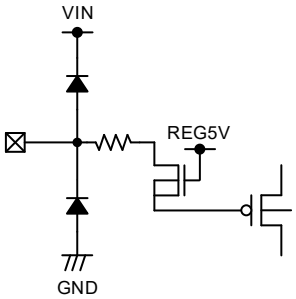

© 2024 ROHM Co., Ltd. All rights reserved.

Operational Notes

1. **Reverse Connection of Power Supply**
   Connecting the power supply in reverse polarity can damage the IC. Take precautions against reverse polarity when connecting the power supply, such as mounting an external diode between the power supply and the IC's power supply pins.

2. **Power Supply Lines**
   Design the PCB layout pattern to provide low impedance supply lines. Separate the ground and supply lines of the digital and analog blocks to prevent noise in the ground and supply lines of the digital block from affecting the analog block. Furthermore, connect a capacitor to ground at all power supply pins. Consider the effect of temperature and aging on the capacitance value when using electrolytic capacitors.

3. **Ground Voltage**
   Ensure that no pins are at a voltage below that of the ground pin at any time, even during transient condition. However, pins that drive inductive loads (e.g. motor driver outputs, DC-DC converter outputs) may inevitably go below ground due to back EMF or electromotive force. In such cases, the user should make sure that such voltages going below ground will not cause the IC and the system to malfunction by examining carefully all relevant factors and conditions such as motor characteristics, supply voltage, operating frequency and PCB wiring to name a few.

4. **Ground Wiring Pattern**
   When using both small-signal and large-current ground traces, the two ground traces should be routed separately but connected to a single ground at the reference point of the application board to avoid fluctuations in the small-signal ground caused by large currents. Also ensure that the ground traces of external components do not cause variations on the ground voltage. The ground lines must be as short and thick as possible to reduce line impedance.

5. **Recommended Operating Conditions**
   The function and operation of the IC are guaranteed within the range specified by the recommended operating conditions. The characteristic values are guaranteed only under the conditions of each item specified by the electrical characteristics.

6. **Inrush Current**
   When power is first supplied to the IC, it is possible that the internal logic may be unstable and inrush current may flow instantaneously due to the internal powering sequence and delays, especially if the IC has more than one power supply. Therefore, give special consideration to power coupling capacitance, power wiring, width of ground wiring, and routing of connections.

7. **Testing on Application Boards**
   When testing the IC on an application board, connecting a capacitor directly to a low-impedance output pin may subject the IC to stress. Always discharge capacitors completely after each process or step. The IC's power supply should always be turned off completely before connecting or removing it from the test setup during the inspection process. To prevent damage from static discharge, ground the IC during assembly and use similar precautions during transport and storage.

8. **Inter-pin Short and Mounting Errors**
   Ensure that the direction and position are correct when mounting the IC on the PCB. Incorrect mounting may result in damaging the IC. Avoid nearby pins being shorted to each other especially to ground, power supply and output pin. Inter-pin shorts could be due to many reasons such as metal particles, water droplets (in very humid environment) and unintentional solder bridge deposited in between pins during assembly to name a few.

© 2024 ROHM Co., Ltd. All rights reserved.

Operational Notes – continued

9. Unused Input Pins

Input pins of an IC are often connected to the gate of a MOS transistor. The gate has extremely high impedance and extremely low capacitance. If left unconnected, the electric field from the outside can easily charge it. The small charge acquired in this way is enough to produce a significant effect on the conduction through the transistor and cause unexpected operation of the IC. So unless otherwise specified, unused input pins should be connected to the power supply or ground line.

10. Regarding the Input Pin of the IC

This monolithic IC contains P+ isolation and P substrate layers between adjacent elements in order to keep them isolated. P-N junctions are formed at the intersection of the P layers with the N layers of other elements, creating a parasitic diode or transistor. For example (refer to figure below):

When GND > Pin A and GND > Pin B, the P-N junction operates as a parasitic diode.
When GND > Pin B, the P-N junction operates as a parasitic transistor.

Parasitic diodes inevitably occur in the structure of the IC. The operation of parasitic diodes can result in mutual interference among circuits, operational faults, or physical damage. Therefore, conditions that cause these diodes to operate, such as applying a voltage lower than the GND voltage to an input pin (and thus to the P substrate) should be avoided.

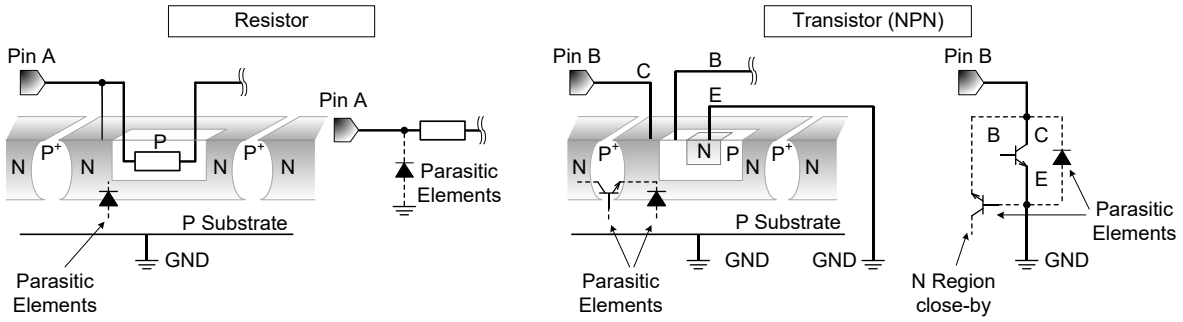

Figure 20. Example of Monolithic IC Structure

11. Ceramic Capacitor

When using a ceramic capacitor, determine a capacitance value considering the change of capacitance with temperature and the decrease in nominal capacitance due to DC bias and others.

12. Thermal Shutdown Circuit (TSD)

This IC has a built-in thermal shutdown circuit that prevents heat damage to the IC. Normal operation should always be within the IC's maximum junction temperature rating. If however the rating is exceeded for a continued period, the junction temperature (Tj) will rise which will activate the TSD circuit that will turn OFF power output pins. When the Tj falls below the TSD threshold, the circuits are automatically restored to normal operation.
Note that the TSD circuit operates in a situation that exceeds the absolute maximum ratings and therefore, under no circumstances, should the TSD circuit be used in a set design or for any purpose other than protecting the IC from heat damage.

13. Over Current Protection Circuit (OCP)

This IC incorporates an integrated overcurrent protection circuit that is activated when the load is shorted. This protection circuit is effective in preventing damage due to sudden and unexpected incidents. However, the IC should not be used in applications characterized by continuous operation or transitioning of the protection circuit.

© 2024 ROHM Co., Ltd. All rights reserved.

Ordering Information

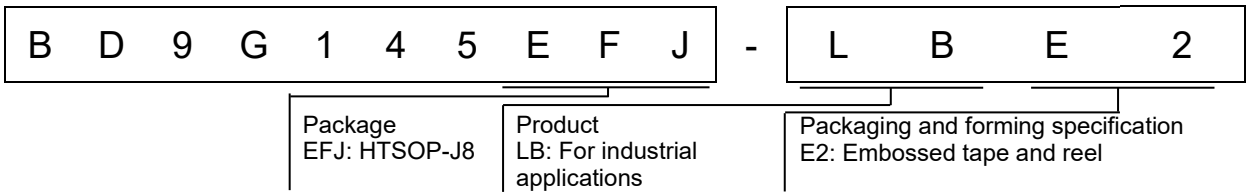

Marking Diagram

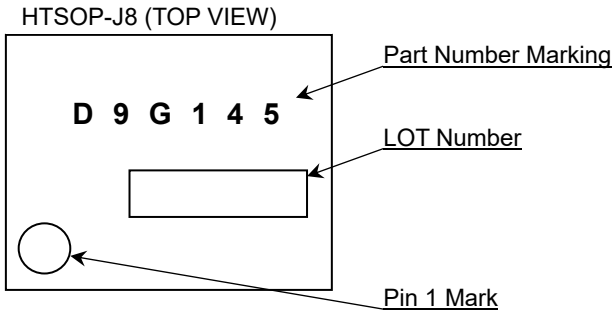

© 2024 ROHM Co., Ltd. All rights reserved.

Physical Dimension and Packing Information

Package Name	HTSOP-J8

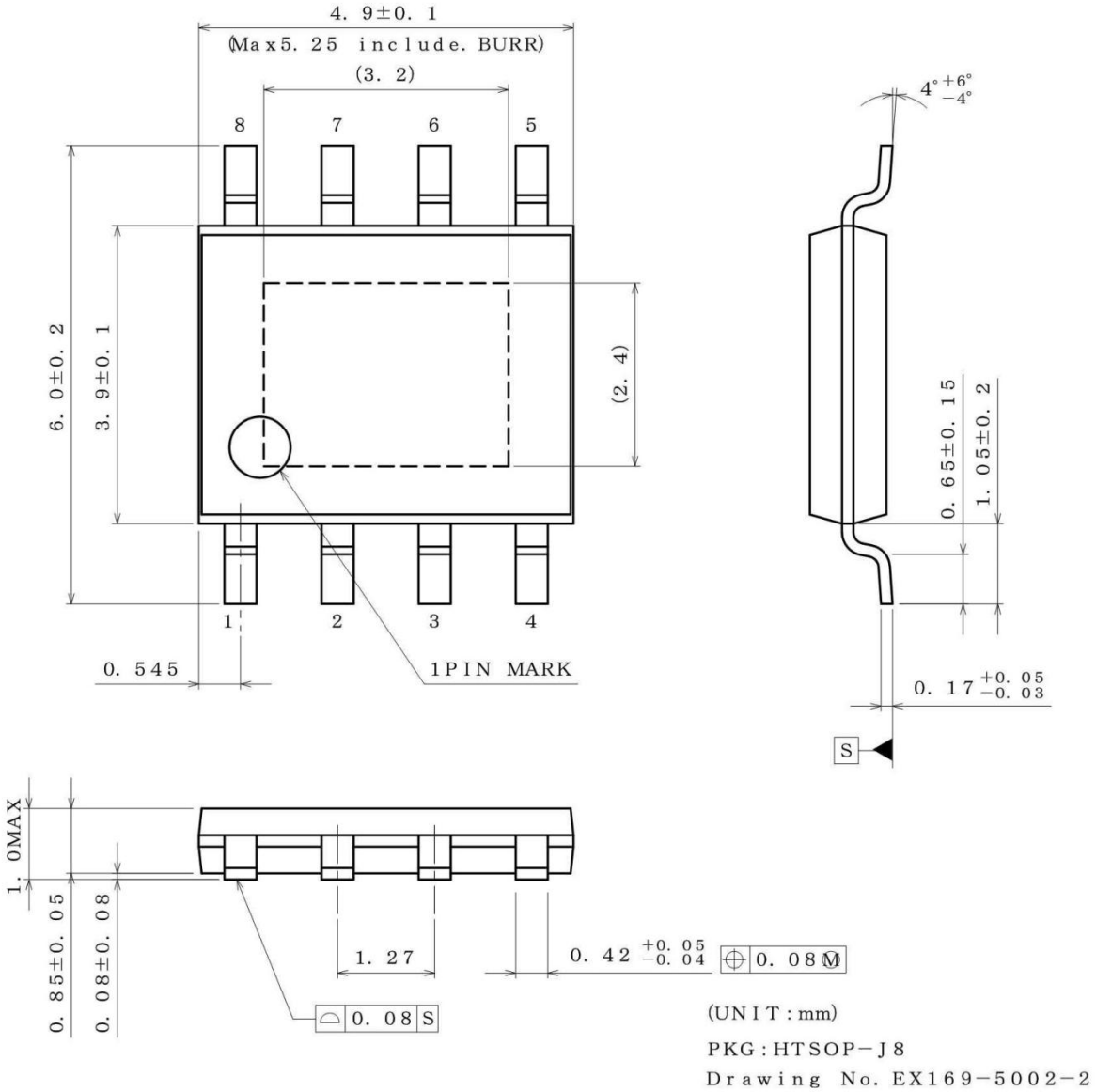

<Tape and Reel information>

Tape	Embossed carrier tape
Quantity	2500pcs
Direction of feed	E2 (The direction is the 1pin of product is at the upper left when you hold reel on the left hand and you pull out the tape on the right hand)

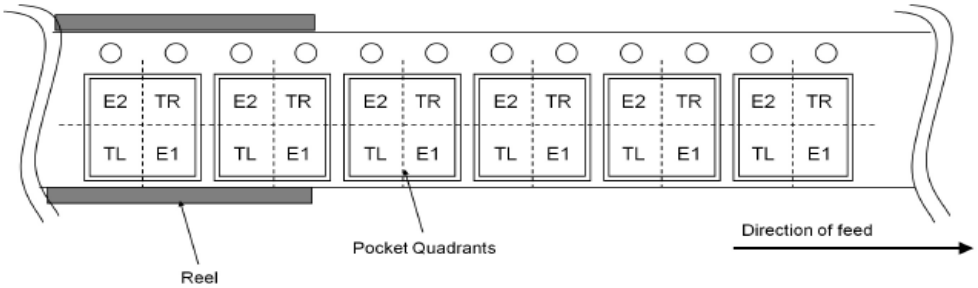

© 2024 ROHM Co., Ltd. All rights reserved.

Revision History

Date	Revision	Changes
09.Mar.2026	001	New Release

© 2024 ROHM Co., Ltd. All rights reserved.

Notice

Precaution on using ROHM Products

1. If you intend to use our Products in devices requiring extremely high reliability (such as medical equipment (Note 1), aircraft/spacecraft, nuclear power controllers, etc.) and whose malfunction or failure may cause loss of human life, bodily injury or serious damage to property ("Specific Applications"), please consult with the ROHM sales representative in advance. Unless otherwise agreed in writing by ROHM in advance, ROHM shall not be in any way responsible or liable for any damages, expenses or losses incurred by you or third parties arising from the use of any ROHM's Products for Specific Applications.

(Note1) Medical Equipment Classification of the Specific Applications

JAPAN	USA	EU	CHINA
CLASSⅢ	CLASSⅢ	CLASSⅡb	CLASSⅢ
CLASSⅣ		CLASSⅢ	

2. ROHM designs and manufactures its Products subject to strict quality control system. However, semiconductor products can fail or malfunction at a certain rate. Please be sure to implement, at your own responsibilities, adequate safety measures including but not limited to fail-safe design against the physical injury, damage to any property, which a failure or malfunction of our Products may cause. The following are examples of safety measures:
   [a] Installation of protection circuits or other protective devices to improve system safety
   [b] Installation of redundant circuits to reduce the impact of single or multiple circuit failure

3. Our Products are not designed under any special or extraordinary environments or conditions, as exemplified below. Accordingly, ROHM shall not be in any way responsible or liable for any damages, expenses or losses arising from the use of any ROHM's Products under any special or extraordinary environments or conditions. If you intend to use our Products under any special or extraordinary environments or conditions (as exemplified below), your independent verification and confirmation of product performance, reliability, etc, prior to use, must be necessary:
   [a] Use of our Products in any types of liquid, including water, oils, chemicals, and organic solvents
   [b] Use of our Products outdoors or in places where the Products are exposed to direct sunlight or dust
   [c] Use of our Products in places where the Products are exposed to sea wind or corrosive gases, including Cl_2, H_2S, NH_3, SO_2, and NO_2
   [d] Use of our Products in places where the Products are exposed to static electricity or electromagnetic waves
   [e] Use of our Products in proximity to heat-producing components, plastic cords, or other flammable items
   [f] Sealing or coating our Products with resin or other coating materials
   [g] Use of our Products without cleaning residue of flux (Exclude cases where no-clean type fluxes is used. However, recommend sufficiently about the residue.); or Washing our Products by using water or water-soluble cleaning agents for cleaning residue after soldering
   [h] Use of the Products in places subject to dew condensation

4. The Products are not subject to radiation-proof design.

5. Please verify and confirm characteristics of the final or mounted products in using the Products.

6. In particular, if a transient load (a large amount of load applied in a short period of time, such as pulse. is applied, confirmation of performance characteristics after on-board mounting is strongly recommended. Avoid applying power exceeding normal rated power; exceeding the power rating under steady-state loading condition may negatively affect product performance and reliability.

7. De-rate Power Dissipation depending on ambient temperature. When used in sealed area, confirm that it is the use in the range that does not exceed the maximum junction temperature.

8. Confirm that operation temperature is within the specified range described in the product specification.

9. ROHM shall not be in any way responsible or liable for failure induced under deviant condition from what is defined in this document.

Precaution for Mounting / Circuit board design

1. When a highly active halogenous (chlorine, bromine, etc.) flux is used, the residue of flux may negatively affect product performance and reliability.

2. In principle, the reflow soldering method must be used on a surface-mount products, the flow soldering method must be used on a through hole mount products. If the flow soldering method is preferred on a surface-mount products, please consult with the ROHM representative in advance.

For details, please refer to ROHM Mounting specification

© 2015 ROHM Co., Ltd. All rights reserved.

Precautions Regarding Application Examples and External Circuits

1. If change is made to the constant of an external circuit, please allow a sufficient margin considering variations of the characteristics of the Products and external components, including transient characteristics, as well as static characteristics.

2. You agree that application examples, their constants, software, and associated data and information contained in this document are presented only as guidance for Products use. Therefore, in case you use such information, you are solely responsible for it and you must exercise your own independent verification and judgment in the use of such information contained in this document. ROHM shall not be in any way responsible or liable for any damages, expenses or losses incurred by you or third parties arising from the use of such information.

Precaution for Electrostatic

This Product is electrostatic sensitive product, which may be damaged due to electrostatic discharge. Please take proper caution in your manufacturing process and storage so that voltage exceeding the Products maximum rating will not be applied to Products. Please take special care under dry condition (e.g. Grounding of human body / equipment / solder iron, isolation from charged objects, setting of Ionizer, friction prevention and temperature / humidity control).

Precaution for Storage / Transportation

1. Product performance and soldered connections may deteriorate if the Products are stored in the places where:
   [a] the Products are exposed to sea winds or corrosive gases, including Cl2, H2S, NH3, SO2, and NO2
   [b] the temperature or humidity exceeds those recommended by ROHM
   [c] the Products are exposed to direct sunshine or condensation
   [d] the Products are exposed to high Electrostatic

2. Even under ROHM recommended storage condition, solderability of products out of recommended storage time period may be degraded. It is strongly recommended to confirm solderability before using Products of which storage time is exceeding the recommended storage time period.

3. Store / transport cartons in the correct direction, which is indicated on a carton with a symbol. Otherwise bent leads may occur due to excessive stress applied when dropping of a carton.

4. Use Products within the specified time after opening a humidity barrier bag. Baking is required before using Products of which storage time is exceeding the recommended storage time period.

Precaution for Product Label

A two-dimensional barcode printed on ROHM Products label is for ROHM's internal use only.

Precaution for Disposition

When disposing Products please dispose them properly using an authorized industry waste company.

Precaution for Foreign Exchange and Foreign Trade act

Since concerned goods might be fallen under listed items of export control prescribed by Foreign exchange and Foreign trade act, please consult with ROHM in case of export.

Precaution Regarding Intellectual Property Rights

1. All information and data including but not limited to application example contained in this document is for reference only. ROHM does not warrant that foregoing information or data will not infringe any intellectual property rights or any other rights of any third party regarding such information or data.

2. ROHM shall not have any obligations where the claims, actions or demands arising from the combination of the Products with other articles such as components, circuits, systems or external equipment (including software).

3. No license, expressly or implied, is granted hereby under any intellectual property rights or other rights of ROHM or any third parties with respect to the Products or the information contained in this document. Provided, however, that ROHM will not assert its intellectual property rights or other rights against you or your customers to the extent necessary to manufacture or sell products containing the Products, subject to the terms and conditions herein.

Other Precaution

1. This document may not be reprinted or reproduced, in whole or in part, without prior written consent of ROHM.

2. The Products may not be disassembled, converted, modified, reproduced or otherwise changed without prior written consent of ROHM.

3. In no event shall you use in any way whatsoever the Products and the related technical information contained in the Products or this document for any military purposes, including but not limited to, the development of mass-destruction weapons.

4. The proper names of companies or products described in this document are trademarks or registered trademarks of ROHM, its affiliated companies or third parties.

© 2015 ROHM Co., Ltd. All rights reserved.

General Precaution

1. All information contained in this document is current as of the issuing date and subject to change without any prior notice. Before purchasing or using ROHM's Products, please confirm the latest information with a ROHM sales representative.

2. The information contained in this document is provided on an "as is" basis and ROHM does not warrant that all information contained in this document is accurate and/or error-free. ROHM shall not be in any way responsible or liable for any damages, expenses or losses incurred by you or third parties resulting from inaccuracy or errors of or concerning such information.

© 2015 ROHM Co., Ltd. All rights reserved.

General Precaution

1. Before you use our Products, you are requested to carefully read this document and fully understand its contents. ROHM shall not be in any way responsible or liable for failure, malfunction or accident arising from the use of any ROHM's Products against warning, caution or note contained in this document.

2. All information contained in this document is current as of the issuing date and subject to change without any prior notice. Before purchasing or using ROHM's Products, please confirm the latest information with a ROHM sales representative.

3. The information contained in this document is provided on an "as is" basis and ROHM does not warrant that all information contained in this document is accurate and/or error-free. ROHM shall not be in any way responsible or liable for any damages, expenses or losses incurred by you or third parties resulting from inaccuracy or errors of or concerning such information.

© 2015 ROHM Co., Ltd. All rights reserved.