Chip tantalum capacitors
(Bottom surface electrode type : Large capacitance)
TCT series PL case

Datasheet

●Features

1) Bottom electrode configuration results in significantly greater compactness.
2) Filet formation enables easy visibility after mounting.
3) Ideal for noise removal on power supply lines with limited space.
4) Eco-friendly halogen-free products.

●Dimensions

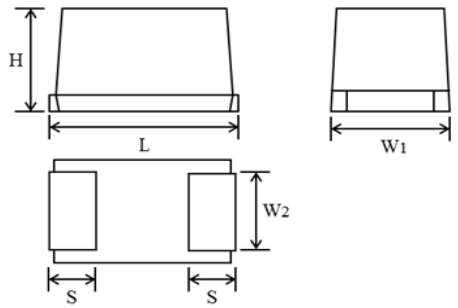

(Unit: mm)

Dimensions	Size
L	2.0±0.2
W_1	1.25±0.2
W_2	0.85±0.2
H	0.9±0.1
S	0.5±0.2

●Part No. Explanation

T C T ☐ P L 0 J 4 7 6 M 8 R – ☐ ☐

① ② ③ ④ ⑤ ⑥ ⑦

① Series name
TCT

② Case style
PL：2012-2012(10)size

③ Rated voltage

CODE	Rated voltage(V)
0E	2.5
0G	4
0J	6.3
1A	10
1C	16
1D	20
1E	25
1V	35
1H	50

④ Nominal capacitance
Nominal capacitance in pF in 3 digits:
2 significant figures followed by the figure representing the number of 0's.

⑤ Capacitance tolerance
M：±20%

⑥ Taping
8: Tape width
R: Positive electrode on the side opposite to sprocket hole

⑦ Discrimination code

© 2022 ROHM Co.,Ltd.All rights reserved.

● Rated table

Impedance(Ω)

Capacitance (μF)	Rated voltage (V.DC)								
	2.5	4	6.3	10	16	20	25	35	50
1.0 (105)									
2.2 (225)									
3.3 (335)									
4.7 (475)									
6.8 (685)									
10 (106)					6				
15 (156)									
22 (226)				5					
33 (336)									
47 (476)			4						
68 (686)									
100 (107)		4							
150 (157)									
220 (227)									

● Marking

The indications listed below should be given on the surface of a capacitor.

(1) Polarity: The polarity should be shown by bar. (on the anode side)

(2) Rated DC voltage: A voltage code is shown as below table.

(3) Capacitance: A capacitance code is shown as below table.

Voltage Code	Rated DC Voltage (V)
e	2.5
g	4
j	6.3
A	10
C	16
D	20
E	25
V	35
H	50

Capacitance Code	Nominal Capacitance (μF)	Capacitance Code	Nominal Capacitance (μF)
E	0.15	e	15
N	0.33	j	22
S	0.47	n	33
A	1.0	s	47
E	1.5	$\overline{w}$	68
J	2.2	$\overline{a}$	100
N	3.3	$\overline{e}$	150
S	4.7	$\overline{j}$	220
W	6.8	$\overline{n}$	330
a	10	$\overline{s}$	470

Visual typical example
voltage code and capacitance code are variable with parts number.

[TCT series PL case]

EX.) j (1) s (2)

(1) voltage code
(2) capacitance code

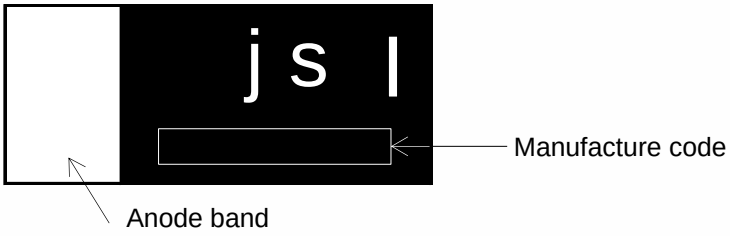

© 2022 ROHM Co.,Ltd.All rights reserved.

●Characteristics

Item		Performance	Test conditions (based on JIS C 5101-1 and JIS C 5101-3)
Operating Temperature		-55°C~+125°C	Voltage reduction when temperature exceeds +85°C
Maximum operating temperature with no voltage derating		+85℃	
Rated voltage (V.DC)		Refer to " Standard list ".	at 85℃
Category voltage (V.DC)		Refer to " Standard list ".	at 125°C
Surge voltage (V.DC)		Refer to " Standard list ".	at 85℃
DC Leakage current		Shall be satisfied the value on " Standard list ".	As per 4.9 JIS C 5101-1 As per 4.5.1 JIS C 5101-3 Voltage : Rated voltage for 5min
Capacitance tolerance		Shall be satisfied allowance range. ±20%	As per 4.7 JIS C 5101-1 As per 4.5.2 JIS C 5101-3 Measuring frequency :120 ± 12Hz Measuring voltage :0.5Vrms + 1.5V.DC Measuring circuit :DC Equivalent series circuit
Tangent of loss angle (Df,tanδ)		Shall be satisfied the value on " Standard list ".	As per 4.8 JIS C 5101-1 As per 4.5.3 JIS C 5101-3 Measuring frequency :120 ± 12Hz Measuring voltage :0.5Vrms + 1.5V.DC Measuring circuit :DC Equivalent series circuit
Impedance		Shall be satisfied the value on " Standard list ".	As per 4.10 JIS C 5101-1 As per 4.5.4 JIS C 5101-3 Measuring frequency :100 ± 10kHz Measuring voltage :0.5Vrms or less Measuring circuit :DC Equivalent series circuit
Resistance to Soldering heat	Appe-arance	There should be no significant abnormality. The indications should be clear.	As per 4.14 JIS C 5101-1 As per 4.6 JIS C 5101-3 Dip in the solder bath Solder temp :240 ± 5°C Duration :10 ± 0.5s Repetition :1 After the specimens, leave it at room temperature for over 24h and then measure the sample.
	L.C.	Less than initial limit.	
	⊿C/C	Within ±20% of initial value.	
	DF (tanδ)	Less than 200% of initial limit.	
Temperature cycle	Appe-arance	There should be no significant abnormality. The indications should be clear.	As per 4.16 JIS C 5101-1 As per 4.10 JIS C 5101-3 Repetition : 5 cycles (1 cycle : steps 1 to 4) without discontinuation. After the specimens, leave it at room temperature for over 24h and then measure the sample. Initial value for ⊿C/C shall be the value after mounted.
	L.C.	Less than 200% of initial limit.	
	⊿C/C	Within ±20% of initial value.	
	DF (tanδ)	Less than 200% of initial limit.	

	Temp.	Time
1	-55±3℃	30±3min
2	Room Temp.	3min or less
3	125±2℃	30±3min
4	Room Temp.	3min or less

© 2022 ROHM Co.,Ltd.All rights reserved.

Item		Performance	Test conditions (based on JIS C 5101-1 and JIS C 5101-3)
Moisture resistance	Appe-arance	There should be no significant abnormality. The indications should be clear.	As per 4.22 JIS C 5101-1 As per 4.12 JIS C 5101-3 After leaving the sample under such atmospheric condition that the temperature and humidity are 60±2°C and 90 to 95% RH, respectively, for 500+12/0h leave it at room temperature for over 24h and then measure the sample. Initial value for ⊿C/C shall be the value after mounted.
	L.C.	Less than 200% of initial limit.	
	⊿C/C	Within ±20% of initial value.	
	DF (tanδ)	Less than 200% of initial limit.	
Temperature Stability	Temp. : -55°C		As per 4.29 JIS C 5101-1 As per 4.13 JIS C 5101-3 Initial value for ⊿C/C shall be the value after mounted.
	⊿C/C	Within 0/-15% of initial value.	
	DF (tanδ)	Shall be satisfied the value on " Standard list "	
	L.C.	–	
	Temp. : +85°C		
	⊿C/C	Within +15/0% of initial value.	
	DF (tanδ)	Shall be satisfied the value on " Standard list "	
	L.C.	Less than 1000% of initial limit.	
	Temp. : +125°C		
	⊿C/C	Within +20/0% of initial value.	
	DF (tanδ)	Shall be satisfied the value on " Standard list "	
	L.C.	Less than 1250% of initial limit.	
Surge voltage	Appe-arance	There should be no significant abnormality. The indications should be clear.	As per 4.26JIS C 5101-1 As per 4.14JIS C 5101-3 Apply the specified surge voltage via the serial resistance of 1kΩ ever 5±0.5 min. for 30±5 s. each time in the atmospheric condition of 85±2°C. Repeat this procedure 1,000 times. After the specimens, leave it at room temperature for over 24h and then measure the sample. Initial value for ⊿C/C shall be the value after mounted.
	L.C.	Less than 200% of initial limit.	
	⊿C/C	Within ±20% of initial value.	
	DF (tanδ)	Less than 200% of initial limit.	
Loading at High temperature	Appe-arance	There should be no significant abnormality. The indications should be clear.	As per 4.23 JIS C 5101-1 As per 4.15 JIS C 5101-3 After applying the rated voltage for 1000+36/0 h without discontinuation via the serial resistance of 3Ω or less at a temperature of 85±2°C, leave the sample at room temperature / humidity for over 24h and measure the value. Initial value for ⊿C/C shall be the value after mounted.
	L.C.	Less than 200% of initial limit.	
	⊿C/C	Within ±20% of initial value.	
	DF (tanδ)	Less than 200% of initial limit.	

© 2022 ROHM Co.,Ltd.All rights reserved.

Item		Performance	Test conditions (based on JIS C 5101-1 and JIS C 5101-3)
Terminal strength	Capa-citance	The measured value should be stable.	As per 4.35 JIS C 5101-1 As per 4.9 JIS C 5101-3 A force is applied to the terminal until it bends to 1mm and by a prescribed tool maintains the condition for 5s. (See the figure below) 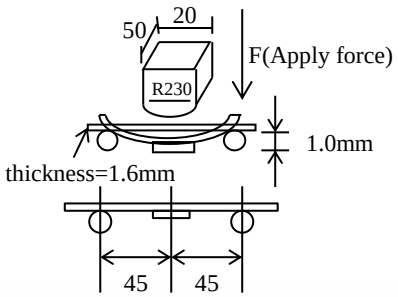
	Appe-arance	There should be no significant abnormality.	
Adhesiveness		The terminal should not come off.	As per 4.34 JIS C 5101-1 As per 4.8 JIS C 5101-3 Apply force of 2N in the two directions shown in the figure below for 10±1s after mounting the terminal on a circuit board. 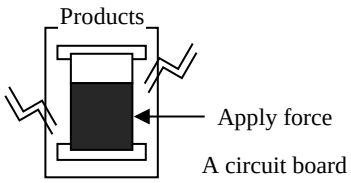
Dimensions		Refer to "External dimensions".	Measure using a caliper of JIS B 7507 Class 2 or higher grade.
Resistance to solvents		The indication should be clear.	As per 4.32 JIS C 5101-1 As per 4.18 JIS C 5101-3 Dip in the isopropyl alcohol for 30±5s, at room temperature.
Solderability		3/4 or more surface area of the solder coated terminal dipped in the soldering bath should be covered with the new solder.	As per 4.15.2 JIS C 5101-1 As per 4.7 JIS C 5101-3 Dip speed=25±2.5mm / s Pre-treatment (accelerated aging): Leave the sample on the boiling distilled water for 1h. Solder temp. : 245±5°C Duration : 3±0.5s Solder : M705 Flux : Rosin 25% IPA 75%
Vibration	Capa-citance	Measure value should not fluctuate during the measurement.	As per 4.17 JIS C 5101-1 Frequency : 10 to 55 to 10Hz/min. Amplitude : 1.5mm Time : 2h each in X and Y directions Mounting : The terminal is soldered on a print circuit board.
	Appe-arance	There should be no significant abnormality.	

© 2022 ROHM Co.,Ltd.All rights reserved.

● Standard products list

Part No.	Rated voltage 85℃ (V)	Category voltage 125°C (V)	Surge voltage 85℃ (V)	Cap. 120Hz (μF)	Tole-rance (%)	Leakage current 25℃ 1WV 5min (μA)	tanδ 120Hz -55℃ (%)	tanδ 120Hz 25℃ (%)	tanδ 120Hz 125°C (%)	Impedance 100kHz (Ω)
TCTPL0G107M8R-V1	4	2.5	5	100	±20	20.0	60	30	40	4
TCTPL0J476M8R	6.3	4	8	47	±20	14.8	60	30	40	4
TCTPL1A226M8R	10	6.3	13	22	±20	11.0	30	20	30	5
TCTPL1C106M8R	16	10	20	10	±20	3.2	30	20	30	6

© 2022 ROHM Co.,Ltd.All rights reserved.

● Packaging specifications

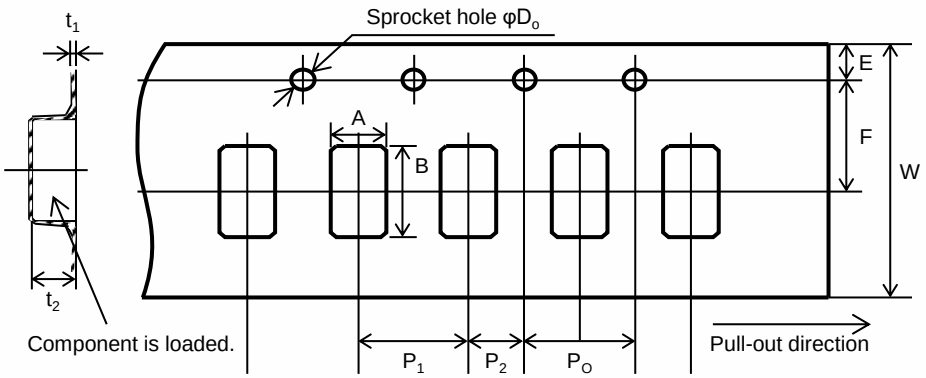

Unit[mm]

A	B	W	E	F	P1	P2
1.60±0.10	2.40±0.10	8.00±0.20	1.75±0.10	3.50±0.05	4.00±0.10	2.00±0.05

PO	DO	t1	t2	Standard packaging quantity
4.00±0.10	φ1.50+0.10/0	0.25±0.05	1.05±0.05	3,000pcs

● Reel dimensions

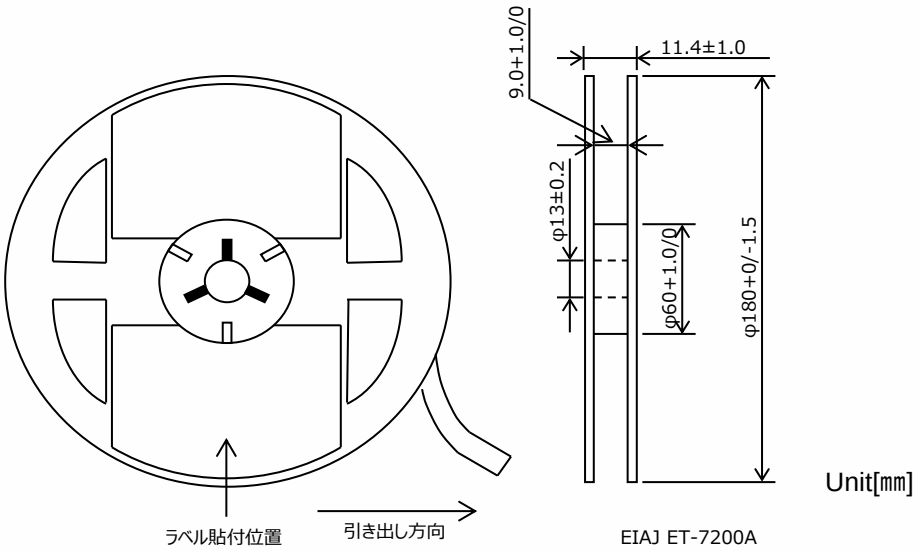

© 2022 ROHM Co.,Ltd.All rights reserved.

Notes

1) The information contained herein is subject to change without notice.

2) Before you use our Products, please contact our sales representative and verify the latest specifications.

3) Although ROHM is continuously working to improve product reliability and quality, semiconductors can break down and malfunction due to various factors.
Therefore, in order to prevent personal injury or fire arising from failure, please take safety measures such as complying with the derating characteristics, implementing redundant and fire prevention designs, and utilizing backups and fail-safe procedures. ROHM shall have no responsibility for any damages arising out of the use of our Poducts beyond the rating specified by ROHM.

4) Examples of application circuits, circuit constants and any other information contained herein are provided only to illustrate the standard usage and operations of the Products. The peripheral conditions must be taken into account when designing circuits for mass production.

5) The technical information specified herein is intended only to show the typical functions of and examples of application circuits for the Products. ROHM does not grant you, explicitly or implicitly, any license to use or exercise intellectual property or other rights held by ROHM or any other parties. ROHM shall have no responsibility whatsoever for any dispute arising out of the use of such technical information.

6) The Products are intended for use in general electronic equipment (i.e. AV/OA devices, communication, consumer systems, gaming/entertainment sets) as well as the applications indicated in this document.

7) The Products specified in this document are not designed to be radiation tolerant.

8) For use of our Products in applications requiring a high degree of reliability (as exemplified below), please contact and consult with a ROHM representative : transportation equipment (i.e. cars, ships, trains), primary communication equipment, traffic lights, fire/crime prevention, safety equipment, medical systems, servers, solar cells, and power transmission systems.

9) Do not use our Products in applications requiring extremely high reliability, such as aerospace equipment, nuclear power control systems, and submarine repeaters.

10) ROHM shall have no responsibility for any damages or injury arising from non-compliance with the recommended usage conditions and specifications contained herein.

11) ROHM has used reasonable care to ensure the accuracy of the information contained in this document. However, ROHM does not warrants that such information is error-free, and ROHM shall have no responsibility for any damages arising from any inaccuracy or misprint of such information.

12) Please use the Products in accordance with any applicable environmental laws and regulations, such as the RoHS Directive. For more details, including RoHS compatibility, please contact a ROHM sales office. ROHM shall have no responsibility for any damages or losses resulting non-compliance with any applicable laws or regulations.

13) When providing our Products and technologies contained in this document to other countries, you must abide by the procedures and provisions stipulated in all applicable export laws and regulations, including without limitation the US Export Administration Regulations and the Foreign Exchange and Foreign Trade Act.

14) This document, in part or in whole, may not be reprinted or reproduced without prior consent of ROHM.

Thank you for your accessing to ROHM product informations.
More detail product informations and catalogs are available, please contact us.

ROHM Customer Support System

http://www.rohm.com/contact/

© 2015 ROHM Co., Ltd. All rights reserved.

General Precaution

1. Before you use our Products, you are requested to carefully read this document and fully understand its contents. ROHM shall not be in any way responsible or liable for failure, malfunction or accident arising from the use of any ROHM's Products against warning, caution or note contained in this document.

2. All information contained in this document is current as of the issuing date and subject to change without any prior notice. Before purchasing or using ROHM's Products, please confirm the latest information with a ROHM sales representative.

3. The information contained in this document is provided on an "as is" basis and ROHM does not warrant that all information contained in this document is accurate and/or error-free. ROHM shall not be in any way responsible or liable for any damages, expenses or losses incurred by you or third parties resulting from inaccuracy or errors of or concerning such information.

© 2015 ROHM Co., Ltd. All rights reserved.