B-8. DC-AC Motor Drive 3-Phase 2-Wire Modulation Po=10kW

2021. Sep
Rev.002

Simulation Parameters

Component name	Component	Default	Simulation Setting Range
Vin	Input voltage	500Vdc	
Vo (p-p)	Output Voltage	400Vpk	
Im (U, V, W)	Output motor current	29A	
Po	Output Power	10kW	
PWM MR		0.8	
fsw	Switching frequency	20kHz	10k – 300kHz
rpm	Number of revolutions	3000rpm	1k -10krpm
Tj	Temperature	100°C	
Vd+	Gate Drive voltage H	15V	10 – 20V
Vd-	Gate Drive voltage L	-4V	-4 – 0V
Vdin	Signal voltage level	5V	

Devices

Component name	Component	Default	Simulation Setting Range
Q1 – Q6	SJ-MOSFET	Selectable	
GD-IC	Gate Driver	BM61M41RFV-C	
R sink	Resistor for sink	1Ω	0.1 -
R source	Resistor for source	2Ω	0.1 -
L1, L2, L3	Inductor	500μH	1μH - 2mH

Simulation Circuit

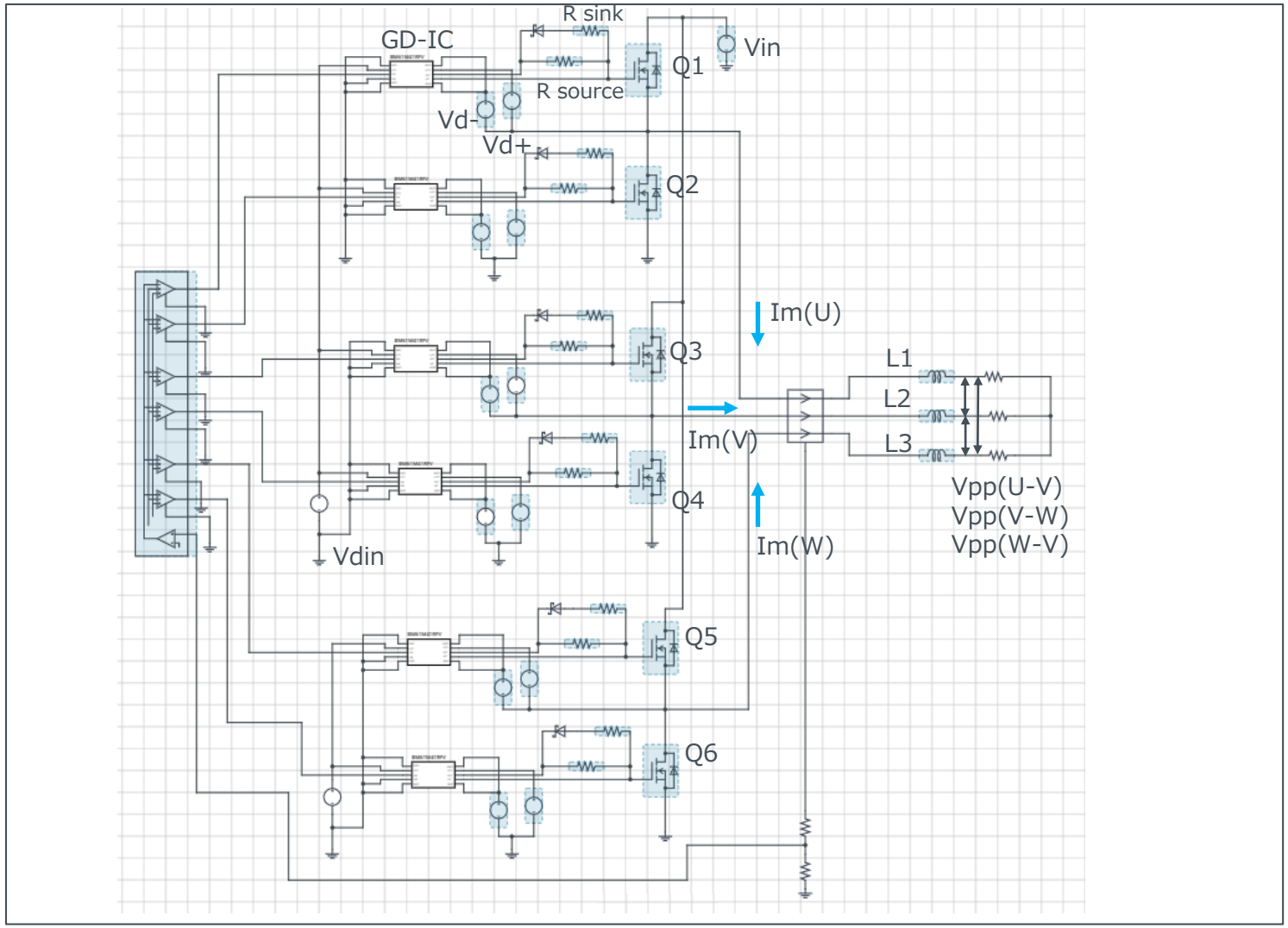

© 2021 ROHM Co., Ltd.

B-8. DC-AC Motor Drive 3-Phase 2-Wire Modulation Po=10kW

2021. Sep
Rev.002

Selectable Devices

Component name	Component	Product No.	feature
Q1 – Q6	SJ-MOSFET	R6004JNX	600V, 4A
	(PrestoMOS™)	R6006JNX	600V, 6A
		R6009JNX	600V, 9A
		R6018JNX	600V, 18A
		R6020JNX	600V, 20A
		R6025JNX	600V, 25A
		R6030JNZ4	600V, 30A
		R6050JNZ4 (*)	600V, 50A

* Default device

© 2021 ROHM Co., Ltd.

Note) We have not been able to confirm operation with all combinations. Please read the disclaimer carefully.

How to choose a product to simulate

2021. Sep
Rev.002

You can select a part number from the product line-ups available in the pull down.

At the simulation page,
Right-click on the device ⇨ Select “Properties” ⇨ Pull down “SpiceLib Part” ⇨ Select the product

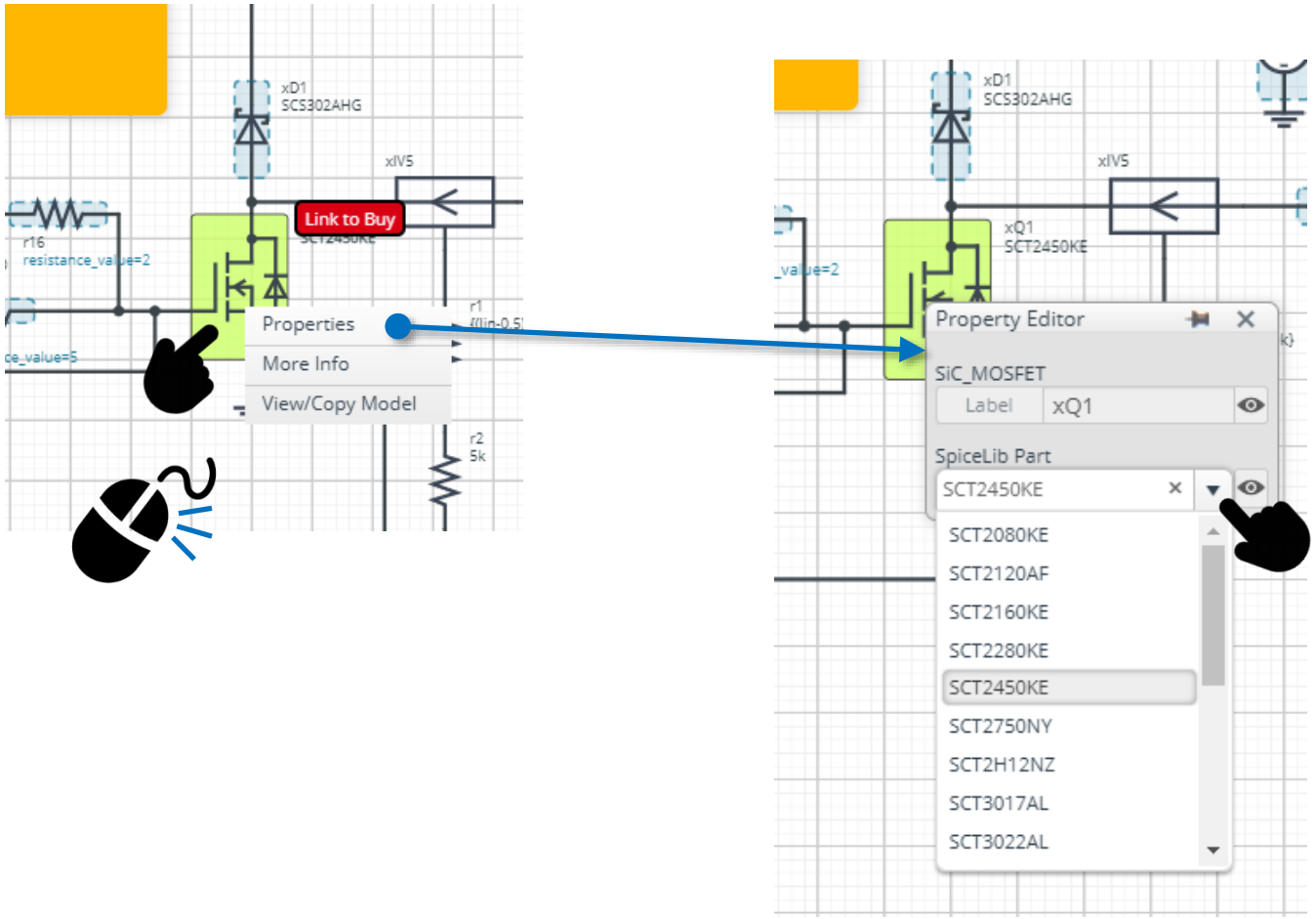

© 2021 ROHM Co., Ltd.

Notes

1) The information contained herein is subject to change without notice.

2) Before you use our Products, please contact our sales representative and verify the latest specifications :

3) Although ROHM is continuously working to improve product reliability and quality, semiconductors can break down and malfunction due to various factors.
Therefore, in order to prevent personal injury or fire arising from failure, please take safety measures such as complying with the derating characteristics, implementing redundant and fire prevention designs, and utilizing backups and fail-safe procedures. ROHM shall have no responsibility for any damages arising out of the use of our Poducts beyond the rating specified by ROHM.

4) Examples of application circuits, circuit constants and any other information contained herein are provided only to illustrate the standard usage and operations of the Products. The peripheral conditions must be taken into account when designing circuits for mass production.

5) The technical information specified herein is intended only to show the typical functions of and examples of application circuits for the Products. ROHM does not grant you, explicitly or implicitly, any license to use or exercise intellectual property or other rights held by ROHM or any other parties. ROHM shall have no responsibility whatsoever for any dispute arising out of the use of such technical information.

6) The Products specified in this document are not designed to be radiation tolerant.

7) For use of our Products in applications requiring a high degree of reliability (as exemplified below), please contact and consult with a ROHM representative : transportation equipment (i.e. cars, ships, trains), primary communication equipment, traffic lights, fire/crime prevention, safety equipment, medical systems, servers, solar cells, and power transmission systems.

8) Do not use our Products in applications requiring extremely high reliability, such as aerospace equipment, nuclear power control systems, and submarine repeaters.

9) ROHM shall have no responsibility for any damages or injury arising from non-compliance with the recommended usage conditions and specifications contained herein.

10) ROHM has used reasonable care to ensure the accuracy of the information contained in this document. However, ROHM does not warrants that such information is error-free, and ROHM shall have no responsibility for any damages arising from any inaccuracy or misprint of such information.

11) Please use the Products in accordance with any applicable environmental laws and regulations, such as the RoHS Directive. For more details, including RoHS compatibility, please contact a ROHM sales office. ROHM shall have no responsibility for any damages or losses resulting non-compliance with any applicable laws or regulations.

12) When providing our Products and technologies contained in this document to other countries, you must abide by the procedures and provisions stipulated in all applicable export laws and regulations, including without limitation the US Export Administration Regulations and the Foreign Exchange and Foreign Trade Act.

13) This document, in part or in whole, may not be reprinted or reproduced without prior consent of ROHM.

Thank you for your accessing to ROHM product informations.
More detail product informations and catalogs are available, please contact us.

ROHM Customer Support System

http://www.rohm.com/contact/

© 2016 ROHM Co., Ltd. All rights reserved.